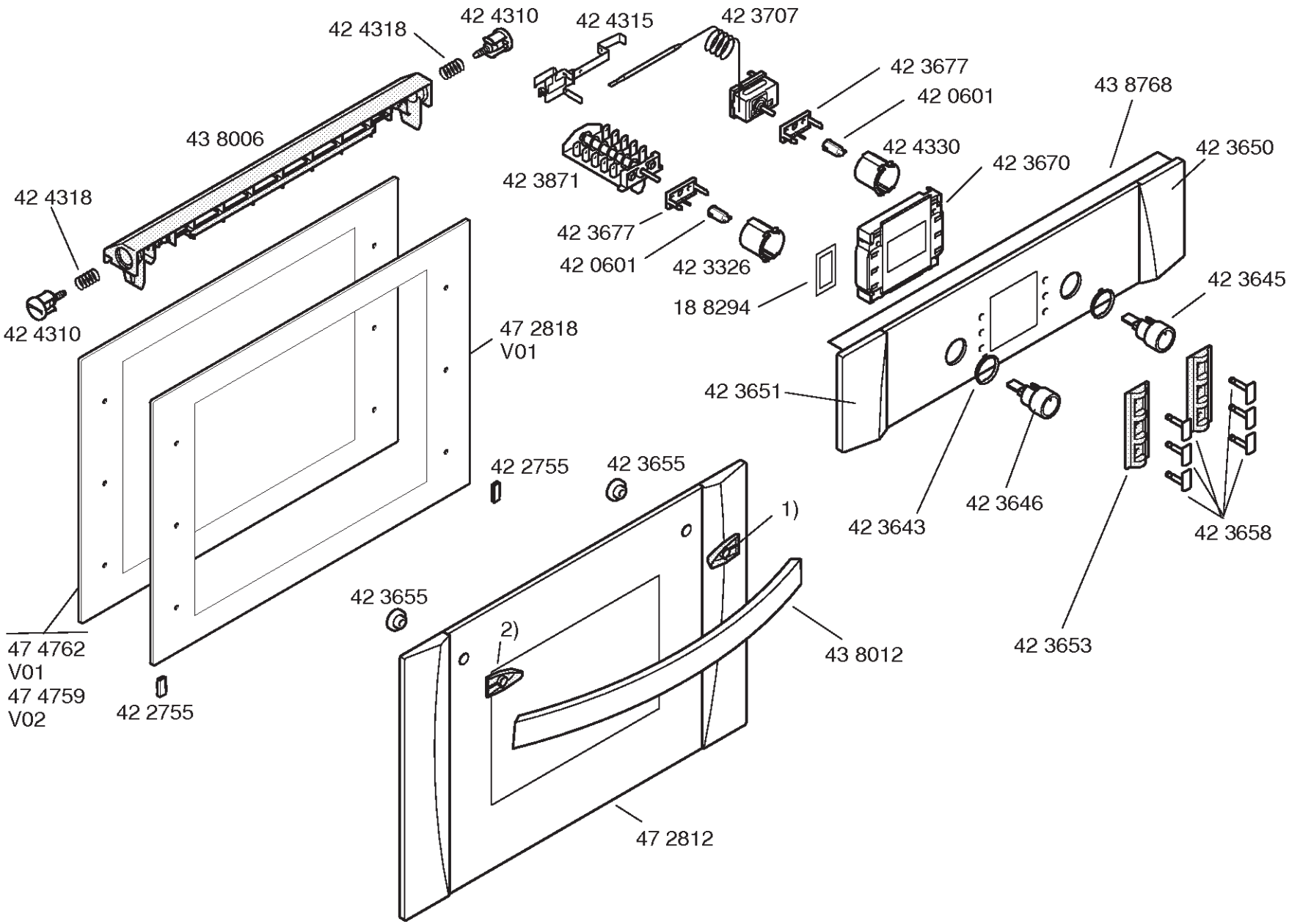

Instrucciones de Uso
59 2694
(es,pt)

Instrucciones montaje
59 1232
(es)

1) 42 3674
2) 42 3675

Patilla de fijación reloj
42 4722

Copyright © (2012) by Balay / 205499

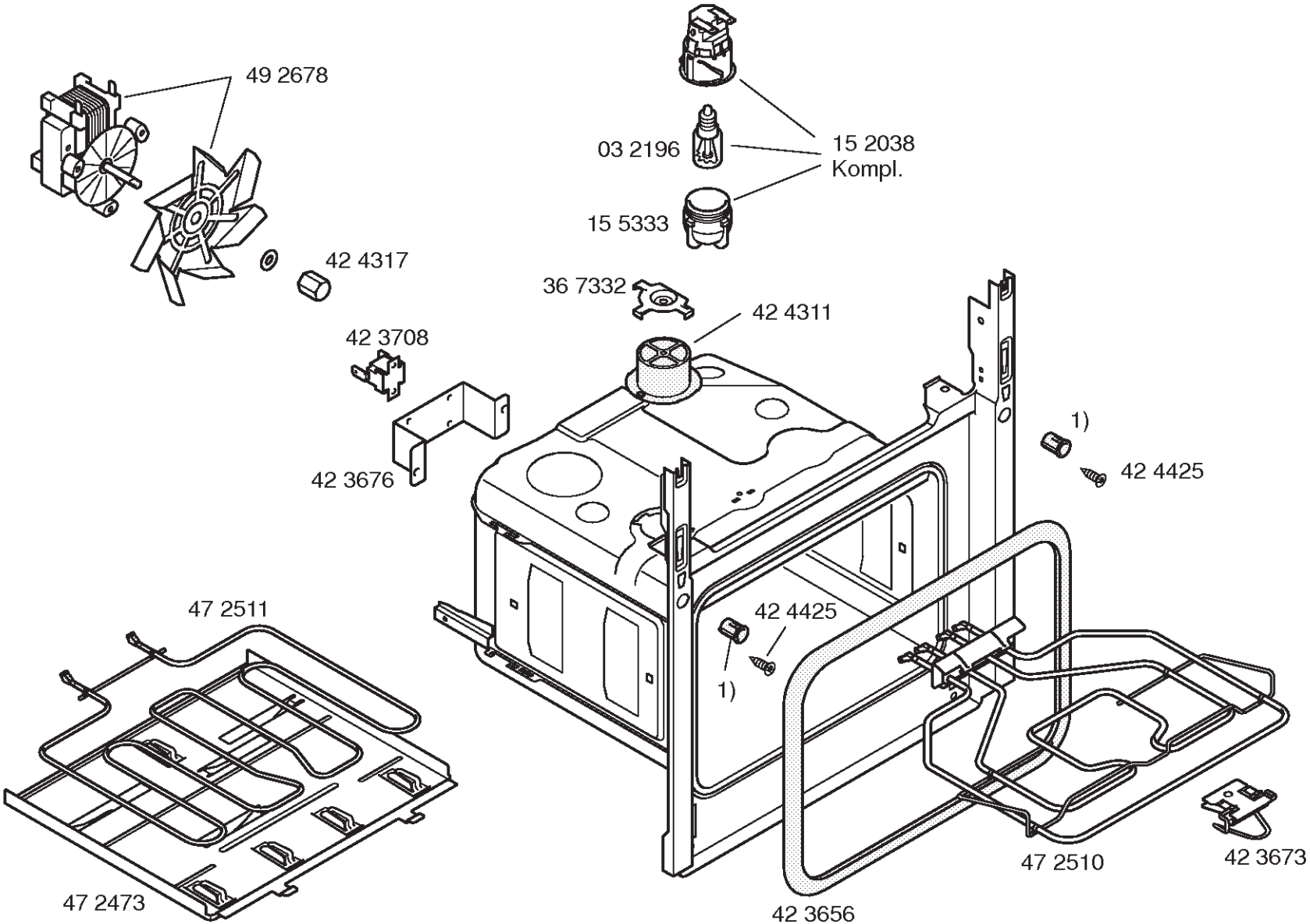

1) 42 3654

Copyright © (2012) by Balay / 205499

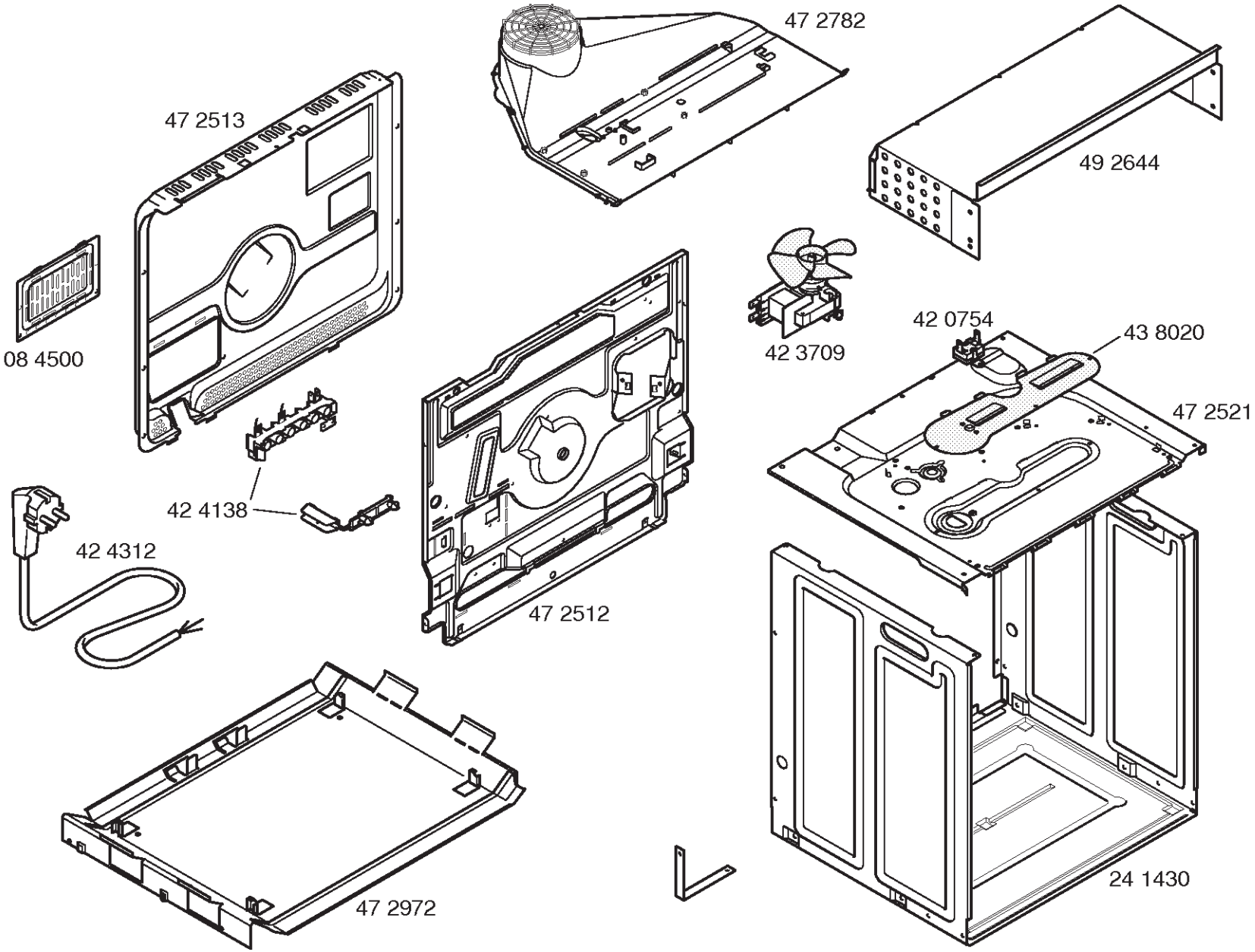

Copyright © (2012) by Balay / 205499

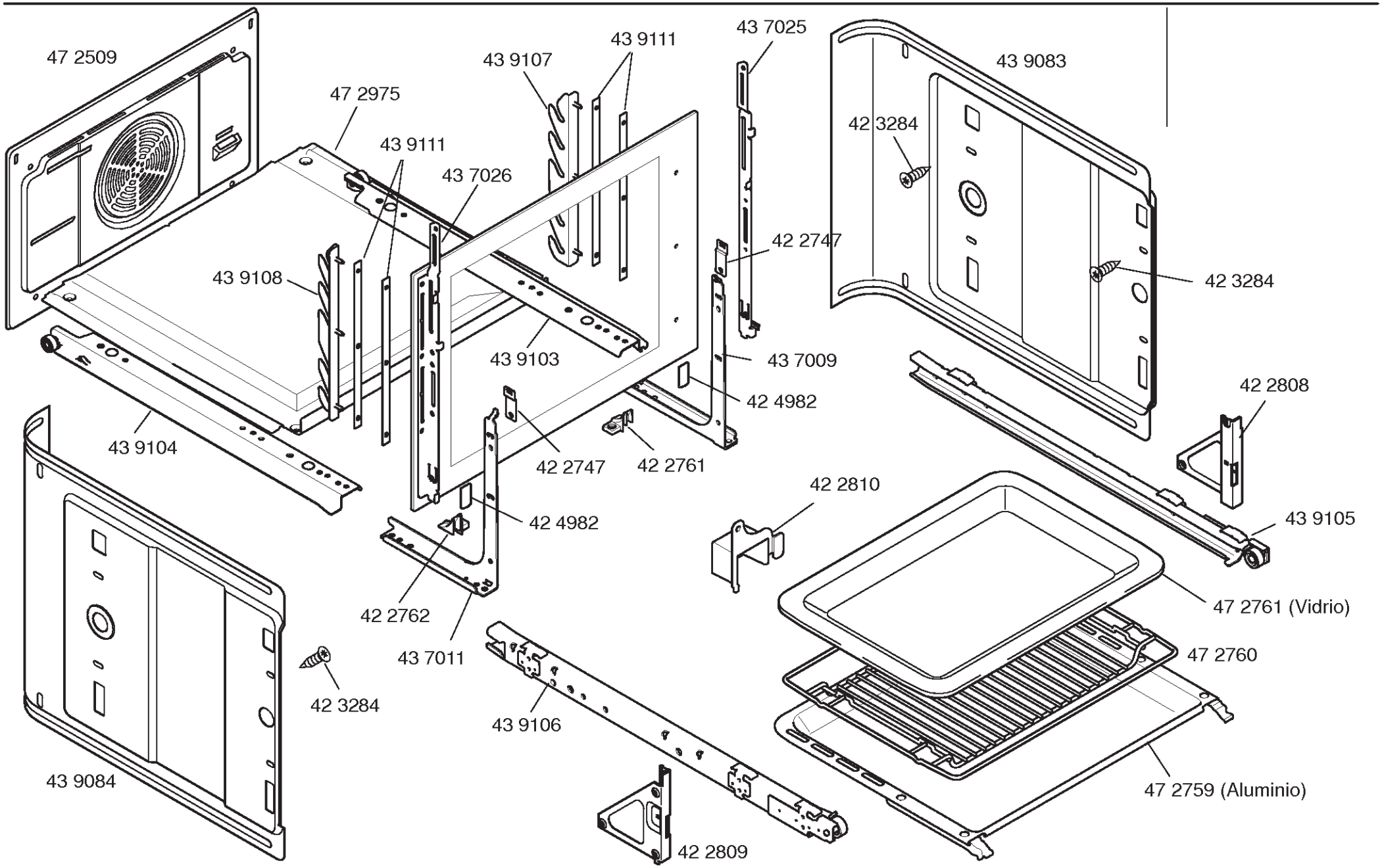

Copyright © (2012) by Balay / 205499