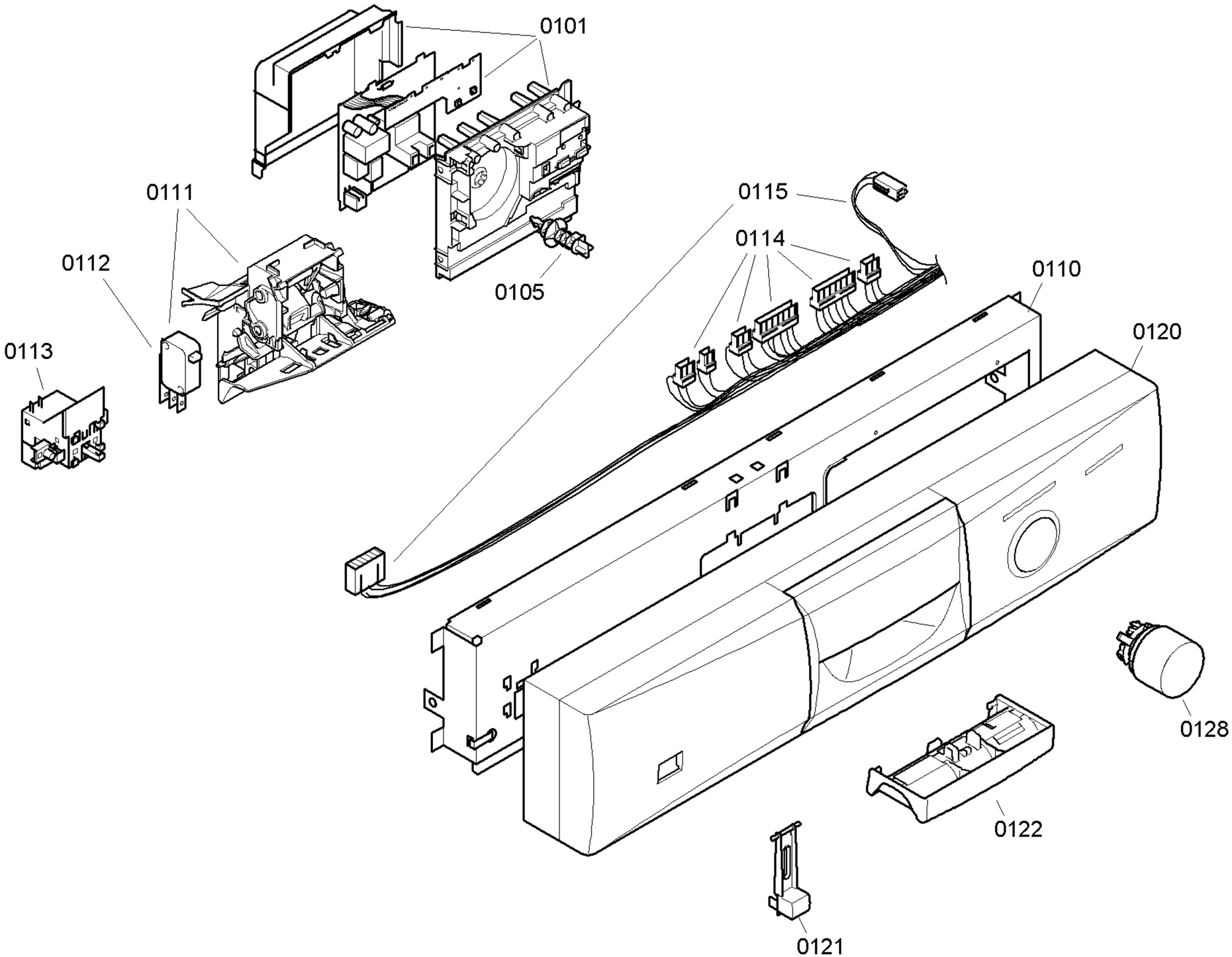

Copyright © (2011) by Balay / 205499

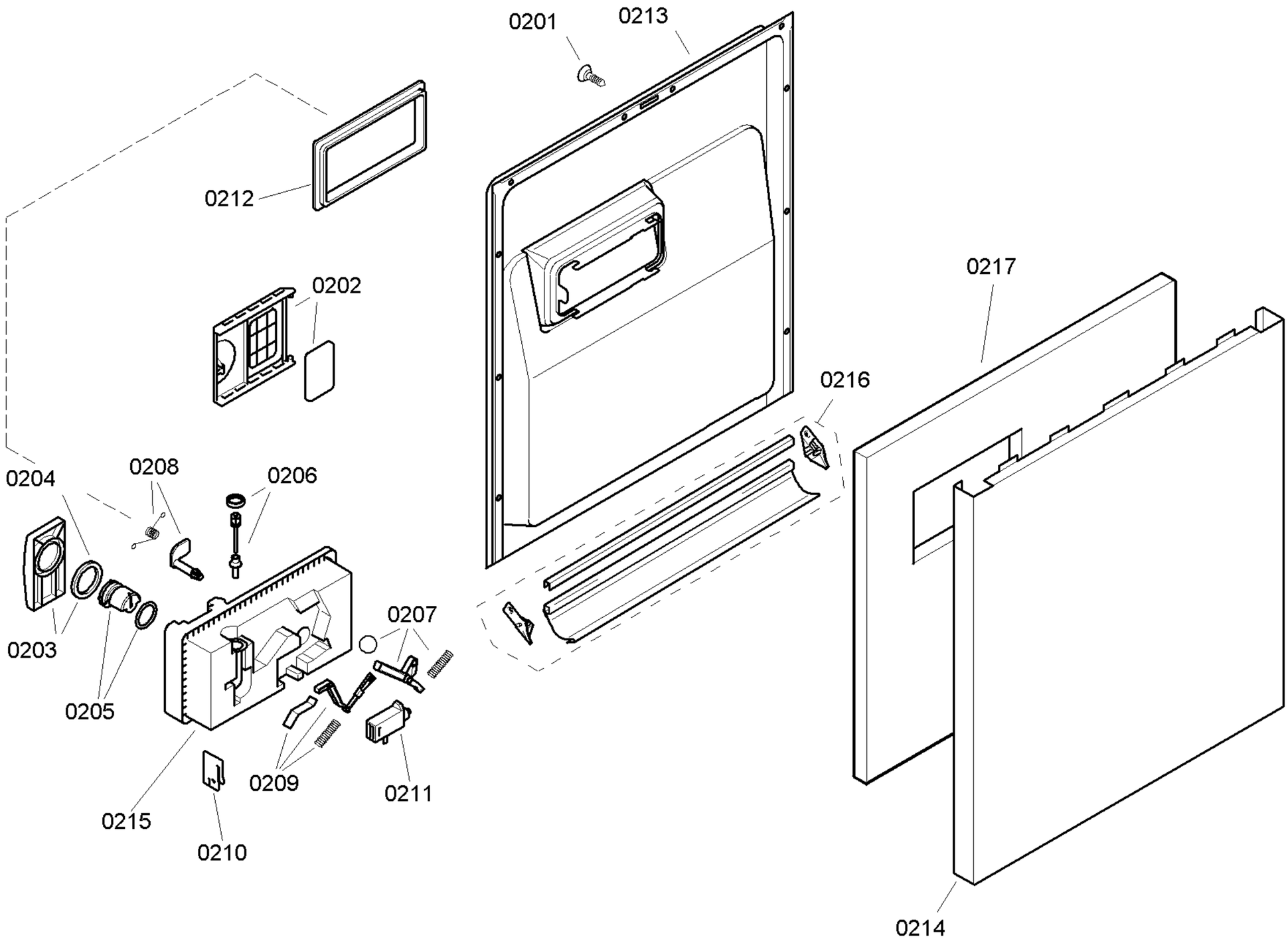

Copyright © (2011) by Balay / 205499

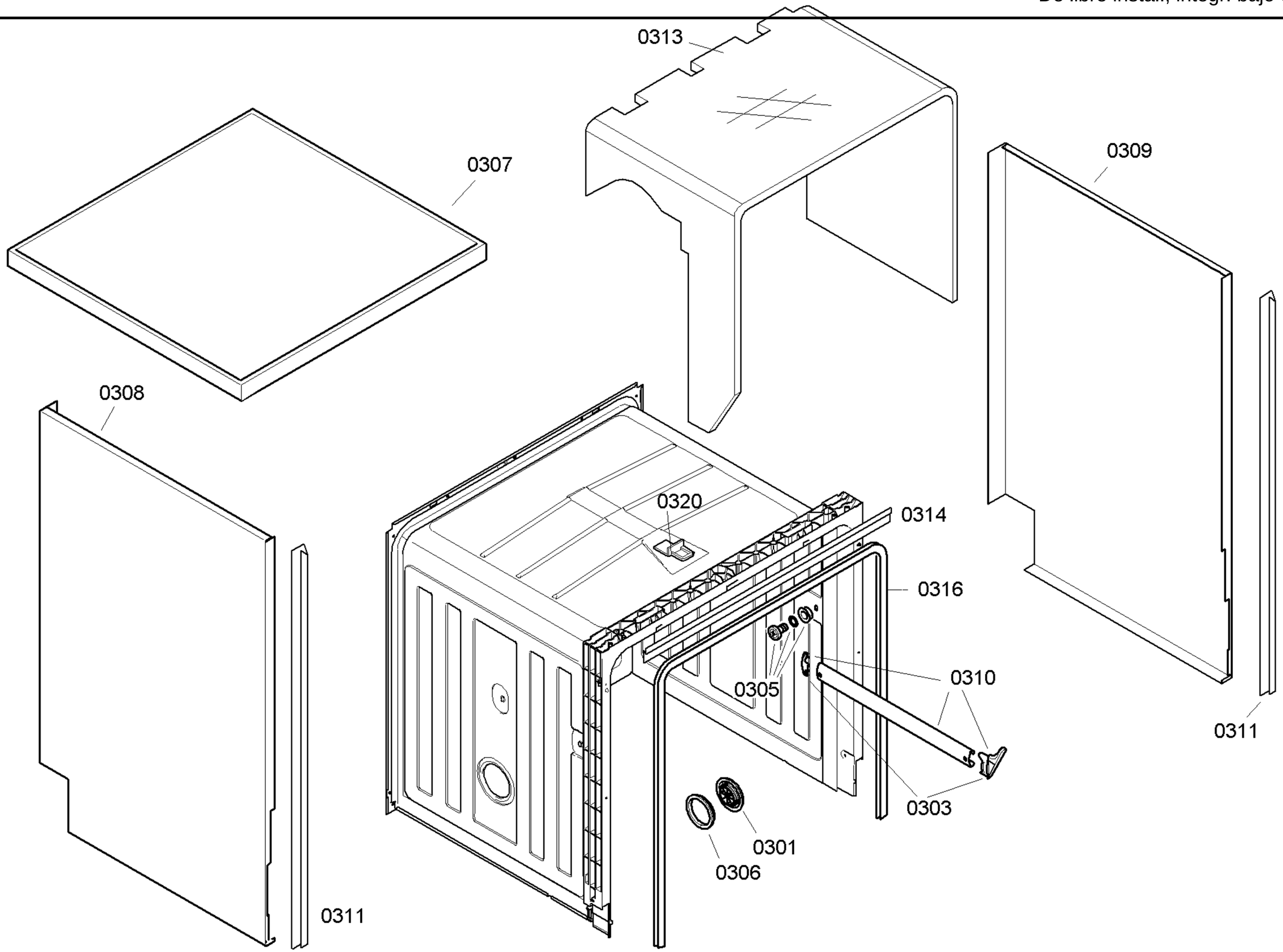

Copyright © (2011) by Balay / 205499

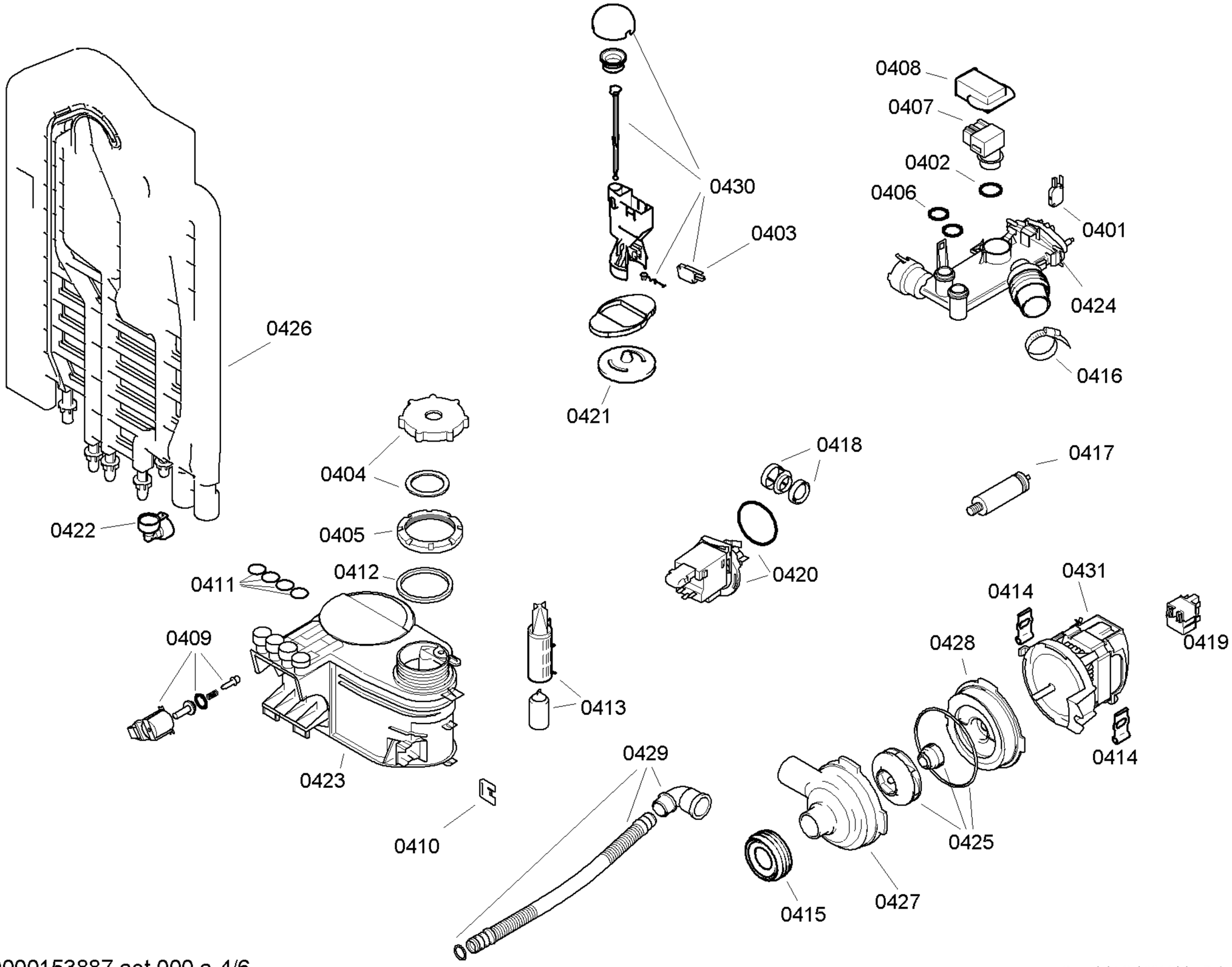

Copyright © (2011) by Balay / 205499

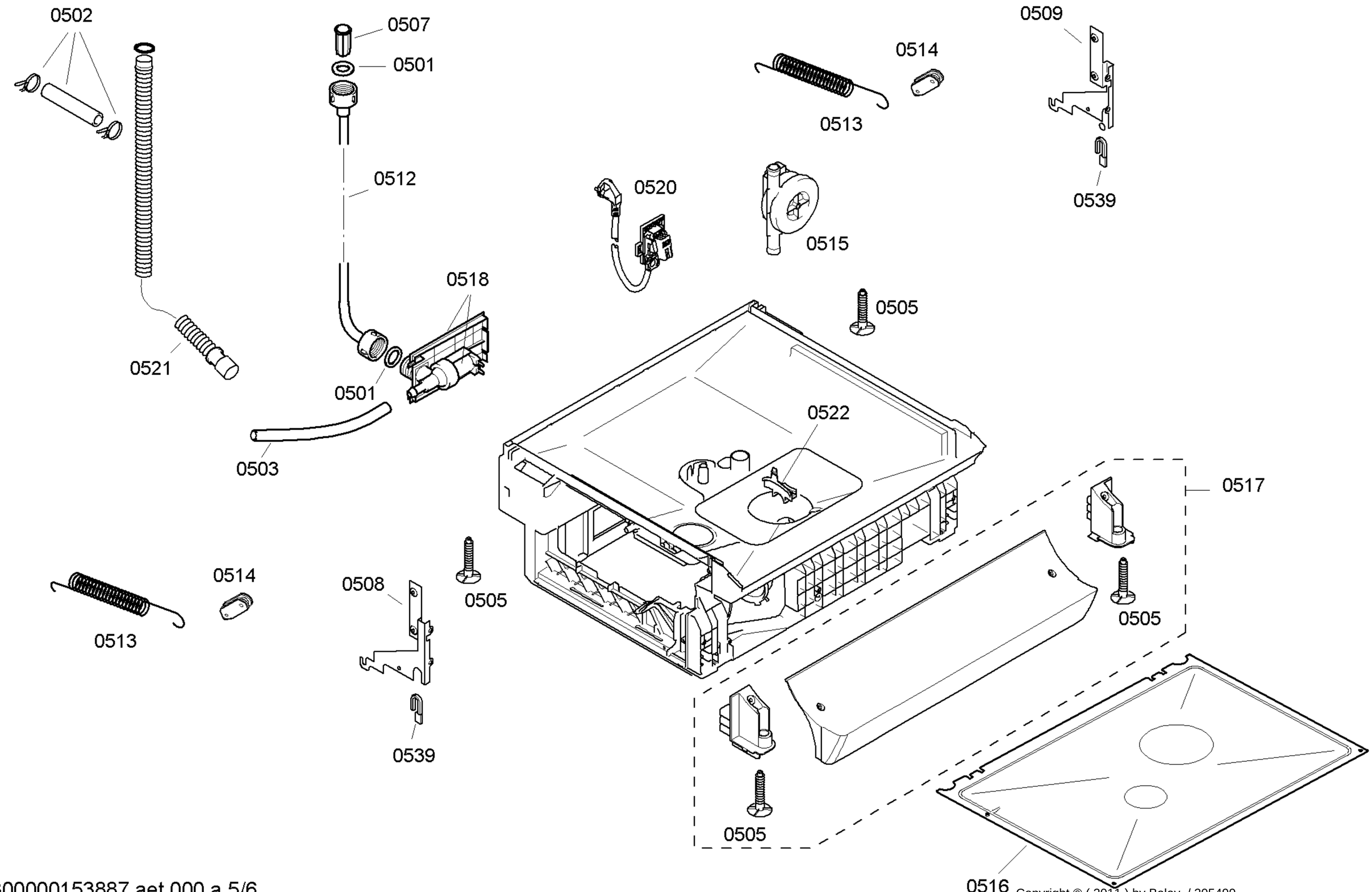

Copyright © (2011) by Balay / 205499

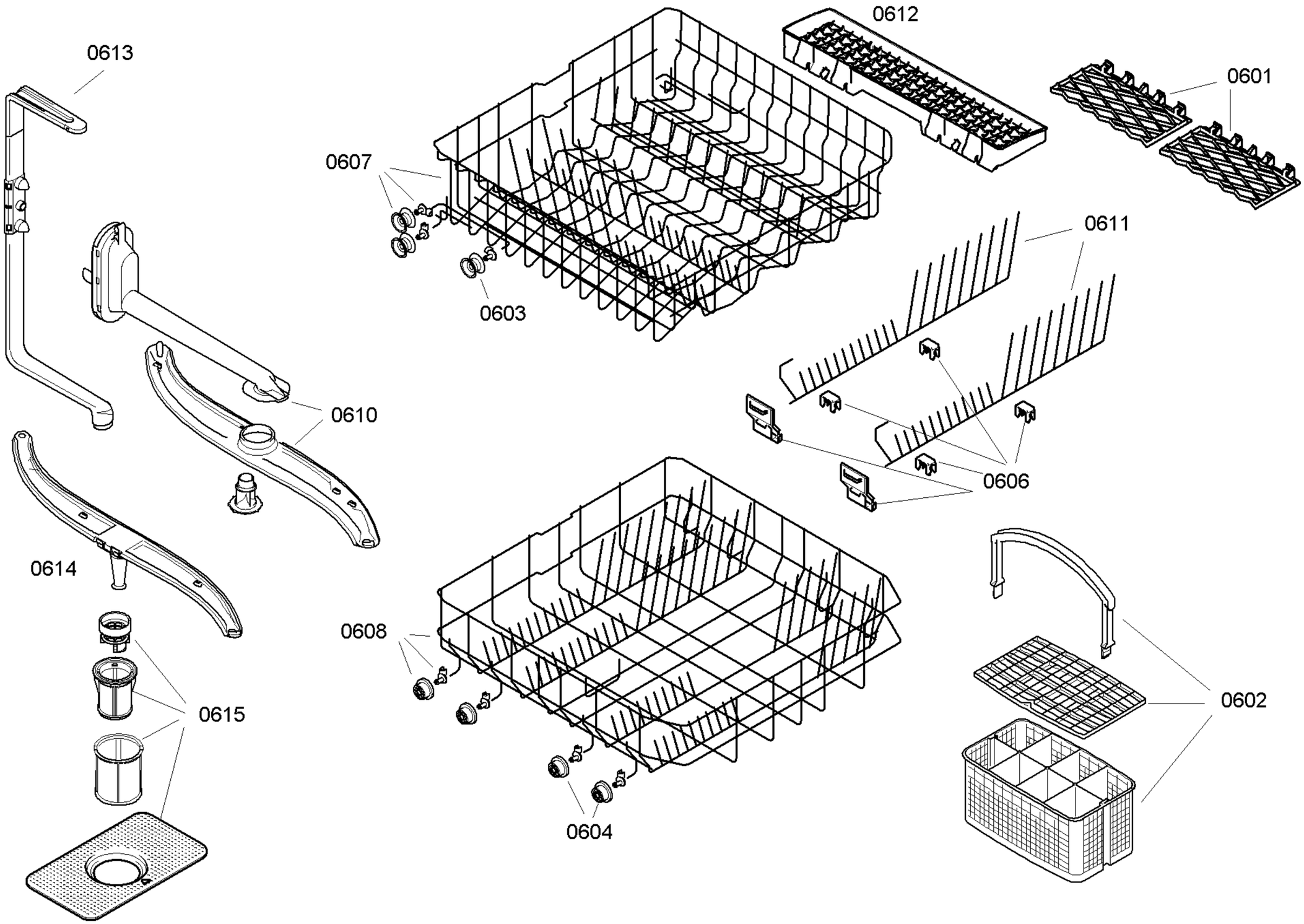

58300000153887 aet 000 a 6/6

Copyright © (2011) by Balay / 205499