	DOUBLE DOOR - 3451	CUSTOMER SUPPORT
	INTERIOR PARTS	

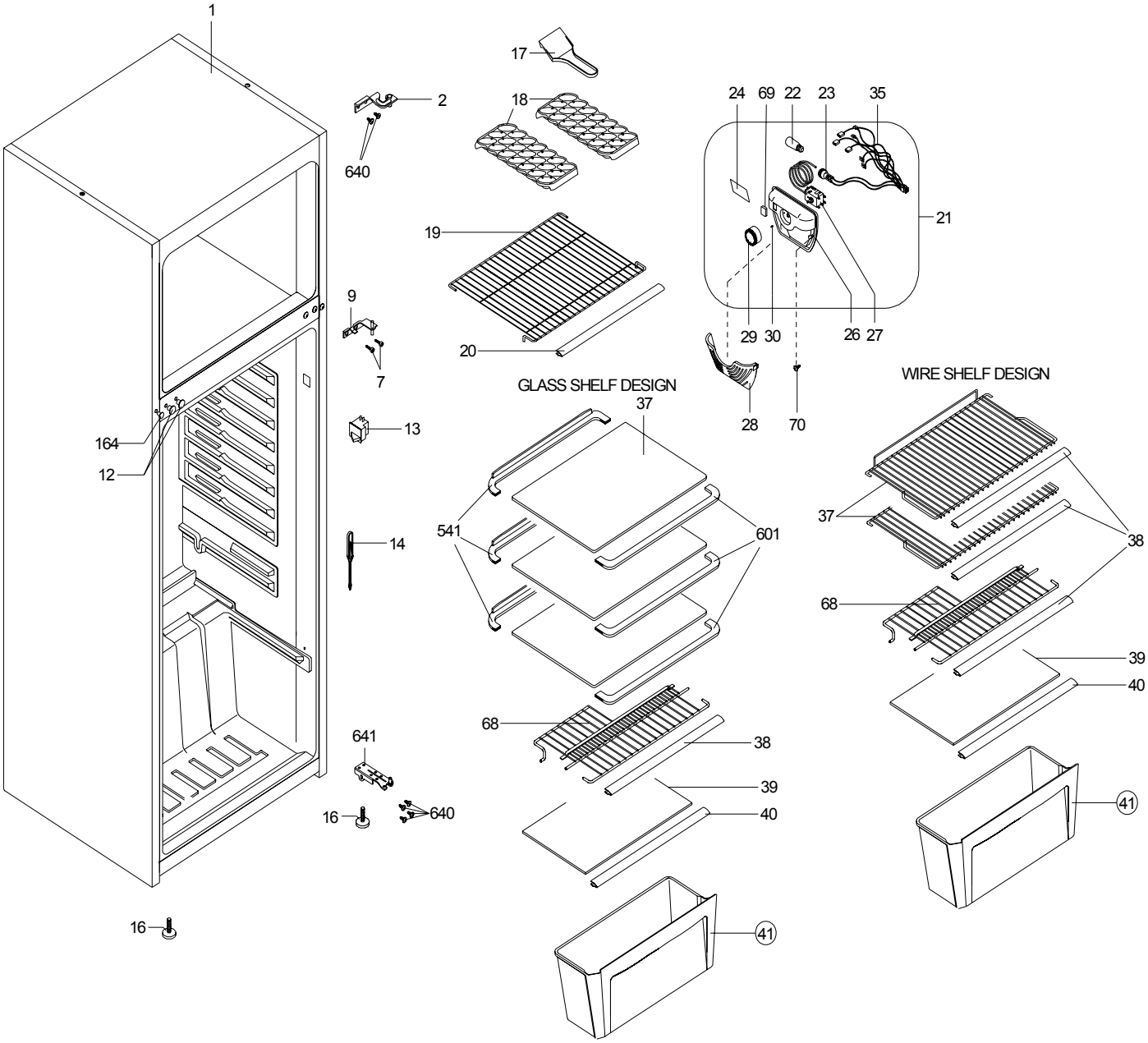

MAY 2014

	DOUBLE DOOR - 3451	CUSTOMER SUPPORT
	INTERIOR PARTS LIST	

POSITION NUMBER	PART NAME
1	ASSY URT CAB/3451
2	TOP HINGE/345
7	SCREW M5*14 YSB-F
9	MIDDLE HINGE/345
12	MIDDLE HINGE SCREW CAP (BIG)
13	DOOR SWITCH
14	TUNNEL DRAIN PLUG
15	BOTTOM HINGE/HC GR.
16	ADJUSTABLE FOOT M8X35
17	ICE SCRAPER *(OPTIONAL)*
18	ICE TRAY *(OPTIONAL)*
19	F COMPARTMENT SHELF/345
20	SHELF TRIM F/345-2
21	THERMOSTAT BOX GR/345
22	LAMP (E14/220-240V/15W)
23	LAMP HOLDER-E14
24	HEAT REFLECTOR FOIL
26	THERMOSTAT BOX/345
27	THERMOSTAT
28	LAMP COVER/345
29	THERMOSTAT KNOB SRGF/345
30	THERMOSTAT KNOB SPRING
35	WIRING HARNESS/THERMOSTAT/345
37	R SHELF
38	SHELF TRIM R
39	CRISPER COVER/345
40	CRISPER COVER TRIM/345
41	CRISPER/345
68	MAGIC SHELF/345
69	THERMOSTAT BOX CAP
70	SCREW KA 40*14 YSB-R-F-INOX
164	DOOR HANDLE SCREW CAP
541	R GLASS SHELF TRIM-BACK/340
601	R GLASS SHELF TRIM-FRONT/1700
640	SCREW TT M5x16 YSB-F
641	BOTTOM HINGE/HC GR.
643	SCREW TT M5x25 YSB-F

MAY 2014

	DOUBLE DOOR - 3451	CUSTOMER SUPPORT
	DOOR ASSY. PARTS	

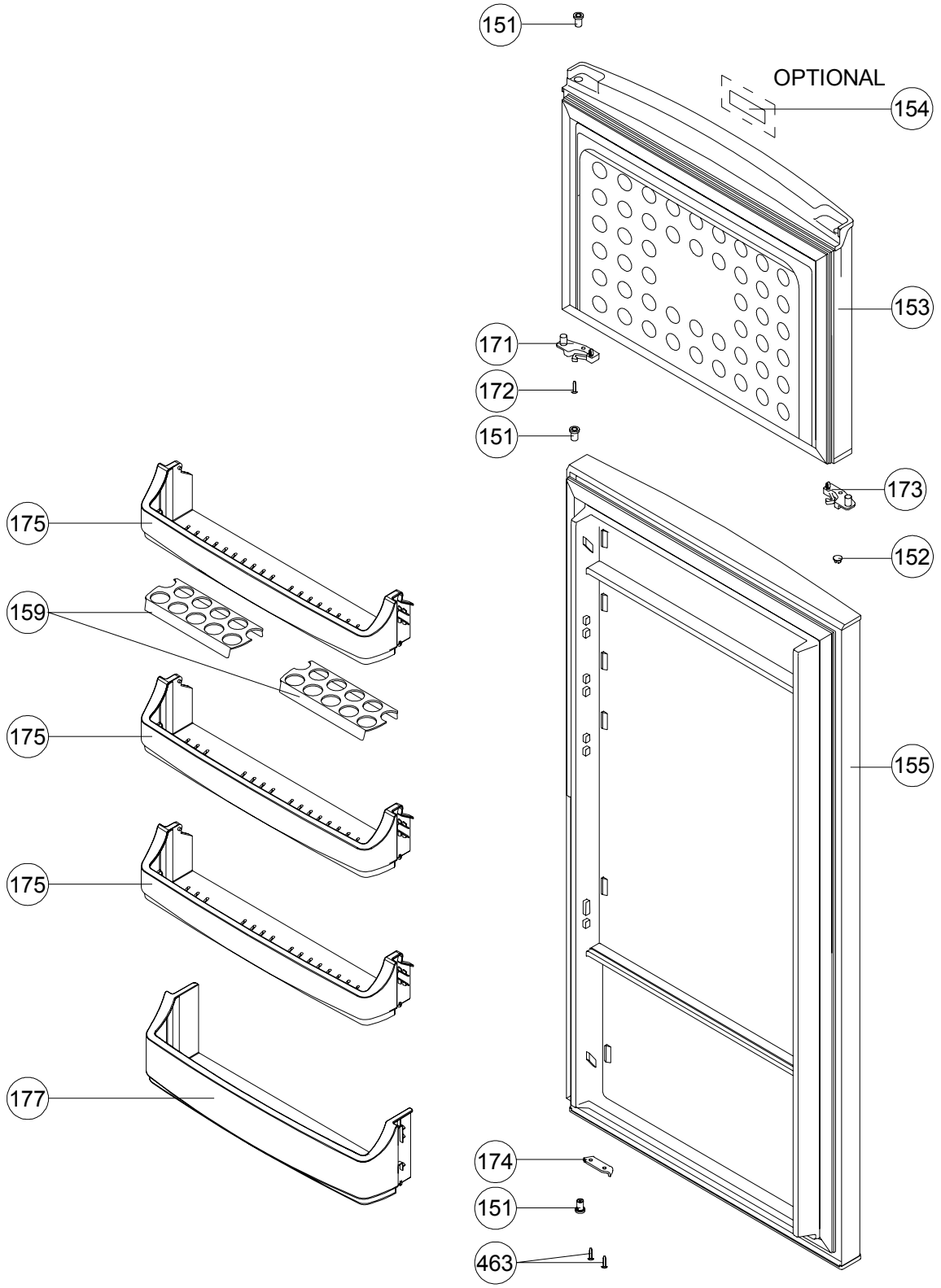

MAY 2014

	DOUBLE DOOR - 3451	CUSTOMER SUPPORT
	DOOR ASSY. PARTS LIST	

POSITION NUMBER	PART NAME
151	BUSHING/345P
152	BUSHING CAP
153	F DOOR ASSY/3451FLN
154	LOGO *(OPTIONAL)*
155	R DOOR ASSY/345FLN
158	EGG SHELF/345
159	EGG HOLDER(I+II)345
171	CATCHER RIGHT
172	SCREW KA 35*12 YSB-C
173	CATCHER LEFT
174	R BOTTOM STOPPER
175	CHEESE/BUTTER SHELF/345
177	BOTTLE SHELF/345
463	SCREW TT M5*20 YHB-C

MAY 2014

	DOUBLE DOOR - 3451	CUSTOMER SUPPORT
	UNIT PARTS	

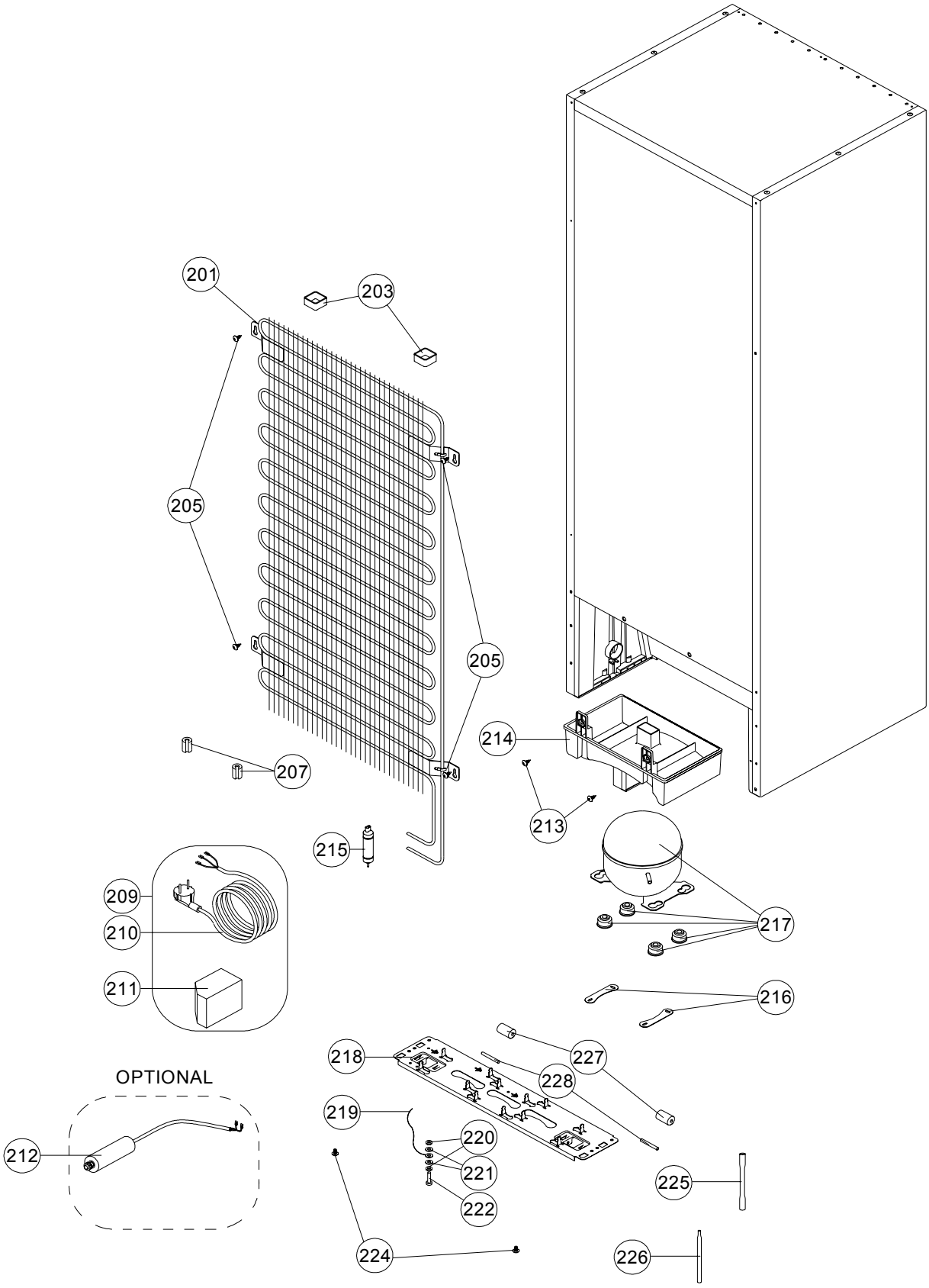

MAY 2014

	DOUBLE DOOR - 3451	CUSTOMER SUPPORT
	UNIT PARTS LIST	

POSITION NUMBER	PART NAME
201	MAIN CONDANSER/345
203	SPACER
205	SCREW ST 4.8*13 YSB-T-C
207	ANTIVIBRATION (CONDENSER)
209	POWER CORD GR
210	POWER CORD
211	OVER LOAD RELAY
212	CAPACITOR *(OPTIONAL)*
213	SCREW 4.2*9.5 DIN 7981 YSB
214	EVAPORATING TRAY/345
215	DRYER (XH9,10GR)
217	COMPRESSOR
216	COMPR. FIXING BRACKET
218	COMPR. BASEMENT/345
219	GROUNDING WIRE
220	NUT M4*3.2 DIN 934 ZNK
221	WASHER 4.3*8*0.9 DIN 6798 ZNK
222	SCREW M4*16 AKB-F
224	SCREW KA 50*14 YSB-F
225	SERVICE TUBE
226	DRYER VACUUM TUBE
227	WHEEL
228	REAR WHEEL PIN

MAY 2014