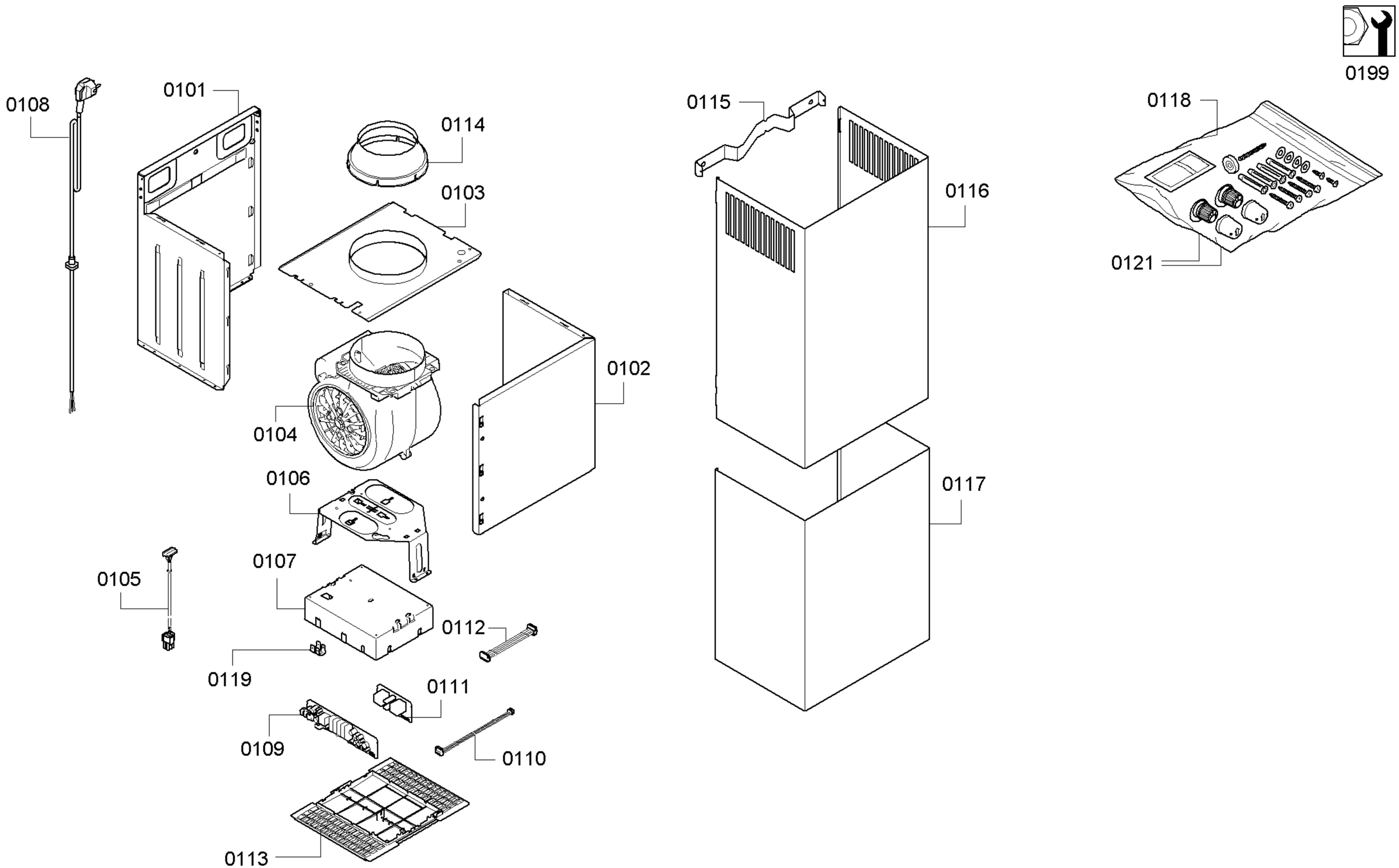

Copyright © (2012) by Siemens / 205499

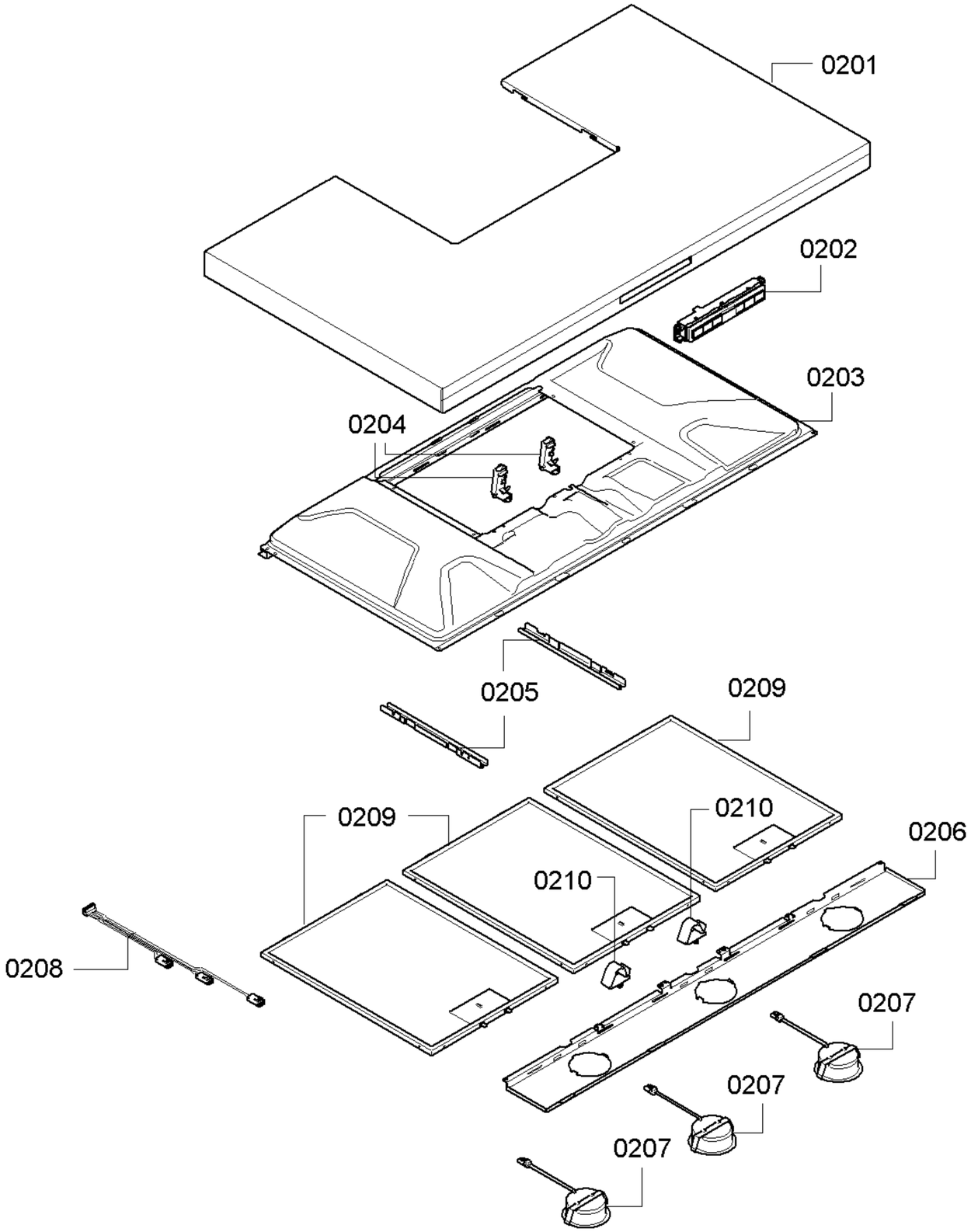

58300000155656 aet 000 a 2/2

Copyright © (2012) by Siemens / 205499