BASKET GROUP

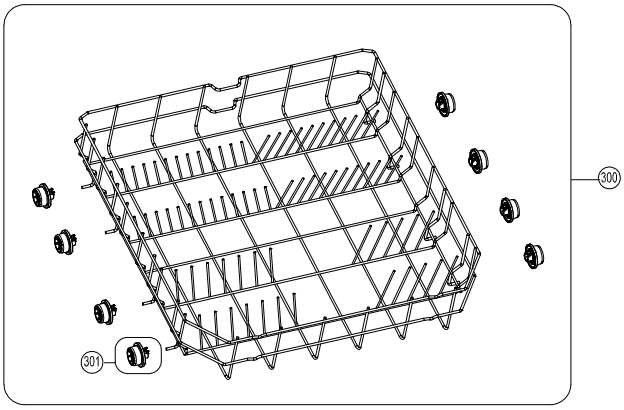

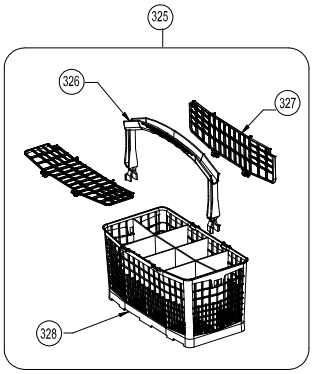

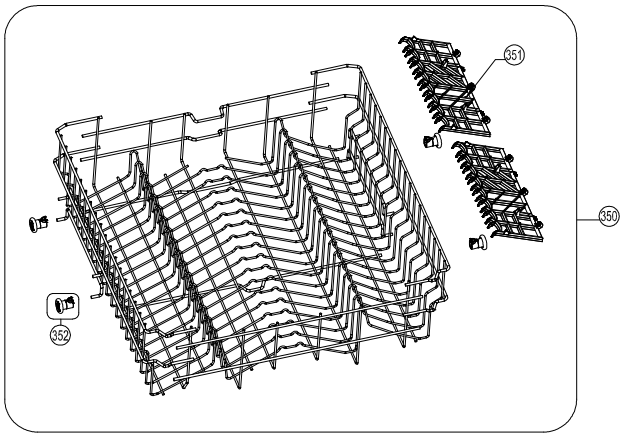

NO	PART NAME	QUANTITY
300	**LOWER BASKET GROUP - FIXED COMB - (301)**	**1**
301	*LOWER BASKET WHEEL GROUP*	*8*
350	**UPPER BASKET GROUP - (351 – 352)**	**1**
351	*MUG SHELVE*	*2*
352	*UPPER BASKET WHEEL GROUP*	*4*
325	**PLASTIC SET BASKET (326-327-328)**	**1**
326	*PLASTIC BASKET HANDLE*	*1*
327	*PLASTIC BASKET COVER*	*2*
328	*PLASTIC BASKET*	*1*

CONTROL PANEL GROUP

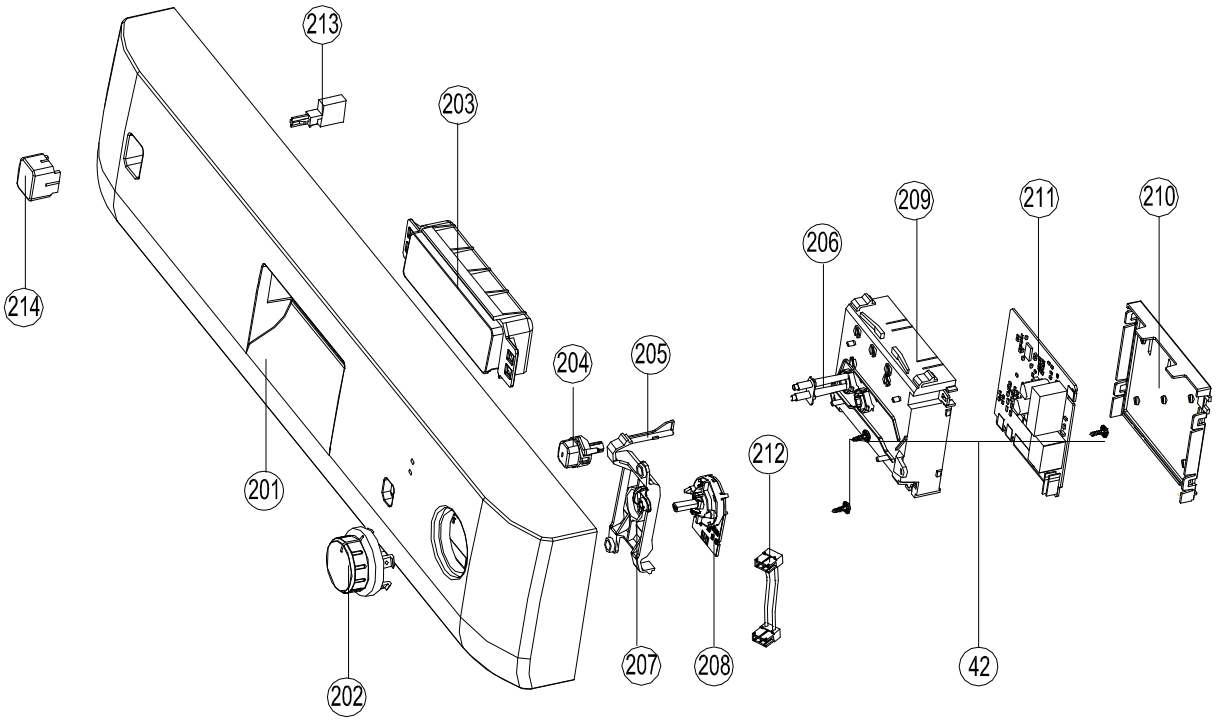

NO	PART NAME	QUANTITY
200	**CON.PAN.GROUP (201-202-203-204-205-206-207-208-209-210-42)**	**1**
201	*CON.PAN.PRINTED*	*1*
202	*KNOB GR*	*1*
203	*HANDLE*	*1*
204	ELECTRONIC BUTTON-1	*1*
205	ELECTRONIC BUTTON SHAFT-1	*1*
206	LIGHT GUIDE-2	*1*
207	ROTARY SWITCH CONNECTION PLS.	*1*
208	*ROTARY SWITCH*	*1*
209	PCB BOX-1 BODY	*1*
210	PCB BOX-1 REAR COVER	*1*
211	ELECT.CARD	*1*
212	ROTARY SWITCH CABLE	1
213	ON/OFF SWITCH	1
214	ON/OFF BUTTON	*1*
42	SCREW PT3,5X9 YSB	*3*

WATER SOFTENER GROUP

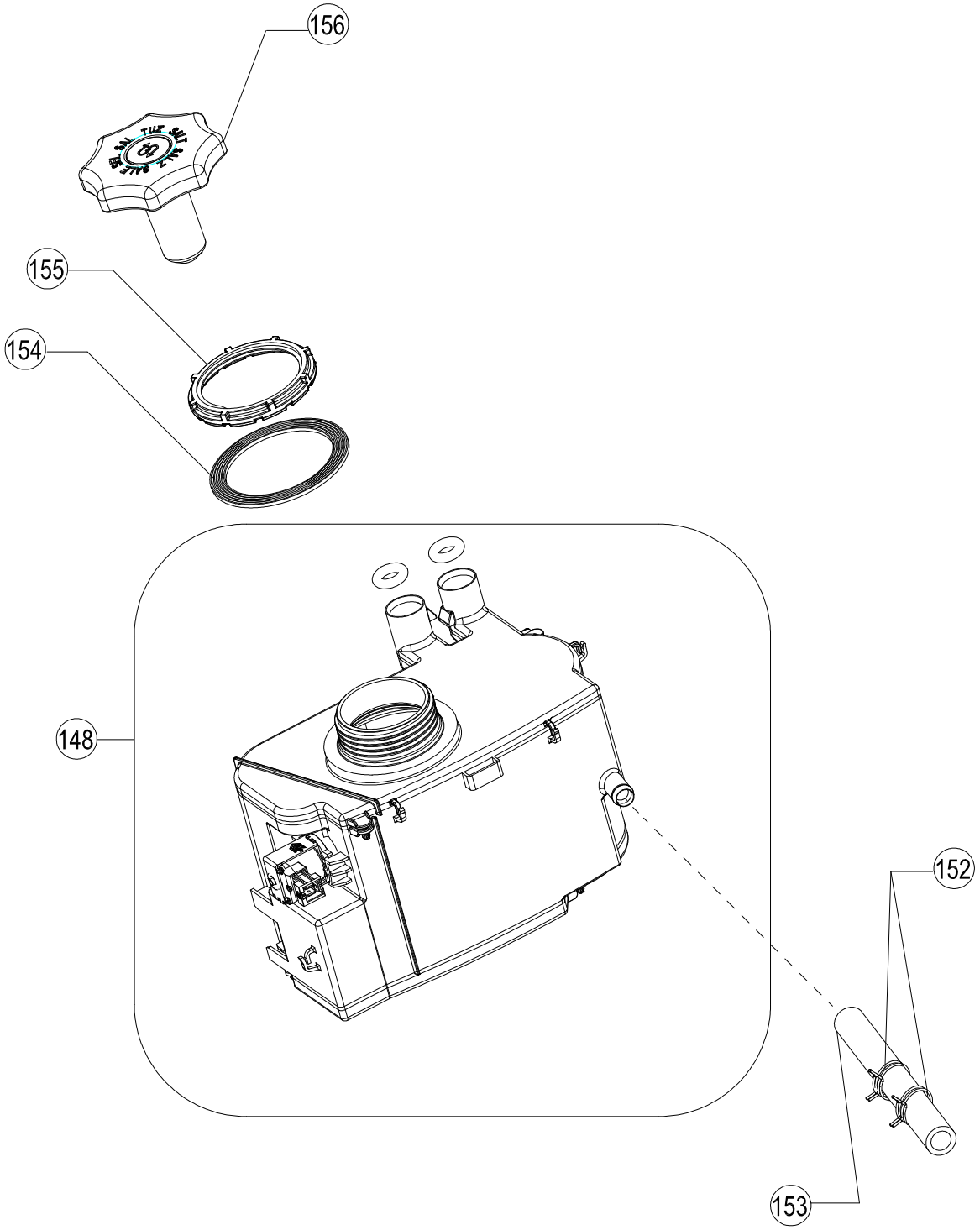

NO	PART NAME	QUANTITY
148	**WATER SOFTENER GR.WITHOUT REED RELAY (151)**	**1**
152	CLAMP Dmax19,6X8,8	2
153	HOSE D12*3*160	1
154	WATER SOFTENER NUT GASKET	1
155	WATER SOFTENER NUT	1
156	SALT CAP GROUP (OPTICAL VERSION)	1

UPPER HYDROLIC GROUP

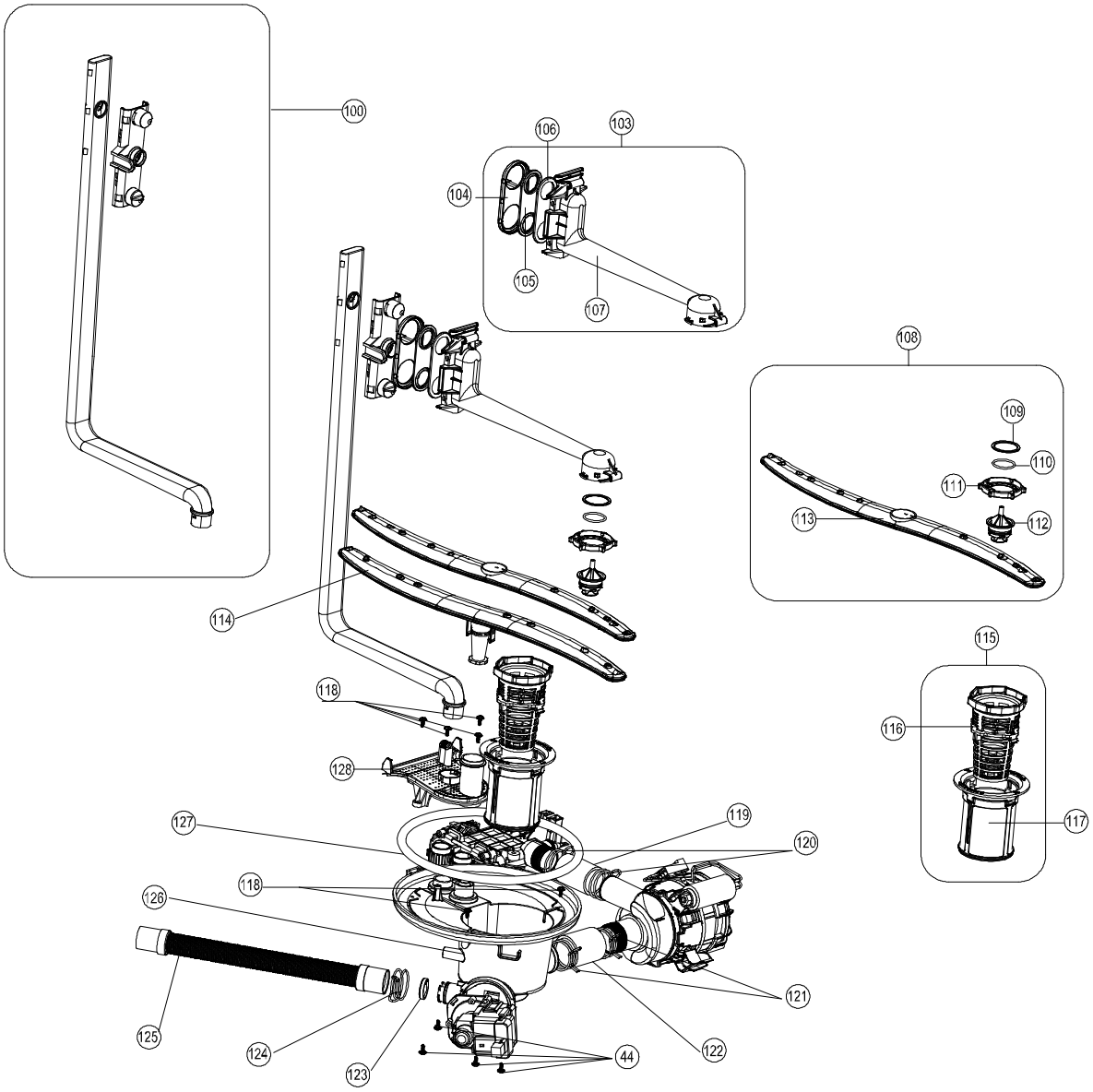

NO	PART NAME	QUANTITY
100	UPPER SPRAY ARM FEEDING CANAL-L	1
103	**UPPER SPRAY ARM SUPPORT GROUP (104-105-106-107)**	1
104	UPPER SPRAY ARM ADAPTER COVER	1
105	UPPER SPRAY ARM ADAPTER GASKET	1
106	UPPER SPRAY ARM ADAPTER FLANGE	1
107	UPPER SPRAY ARM SUPPORT	1
108	**UPPER SPRAY ARM GROUP(113-112-111-110-109)**	1
109	UPPER SPRAY ARM NUT PLASTIC	1
110	UPPER SPRAY ARM SHAFT O-RING	1
111	UPPER SPRAY ARM NUT	1
112	UPPER SPRAY ARM SHAFT	1
113	UPPER SPRAY ARM	1

NO	PART NAME	QUANTITY
114	LOWER SPRAY ARM	1
115	**MICROFILTER GROUP (116-117)**	1
116	COURSE FILTER	1
117	MICROFILTER	1
118	SCREW PT4X12 YSB INOX	6
119	HOSE D28,5X3	1
120	CLAMP Dmax36,4X14	2
121	CLAMP Dmax41X14,8	2
122	HOSE D33X3	1
123	KLAPE	1
124	CLAMP Dmax29,4X11,4)	1
125	DRAIN HOSE 200 CM	1
126	SUMP	1
127	SUMP SEAL	1
128	SPRAY ARM SUPPORT	1
44	SCREWPT4X12YSB	4

LOWER HYDROLIC GROUP

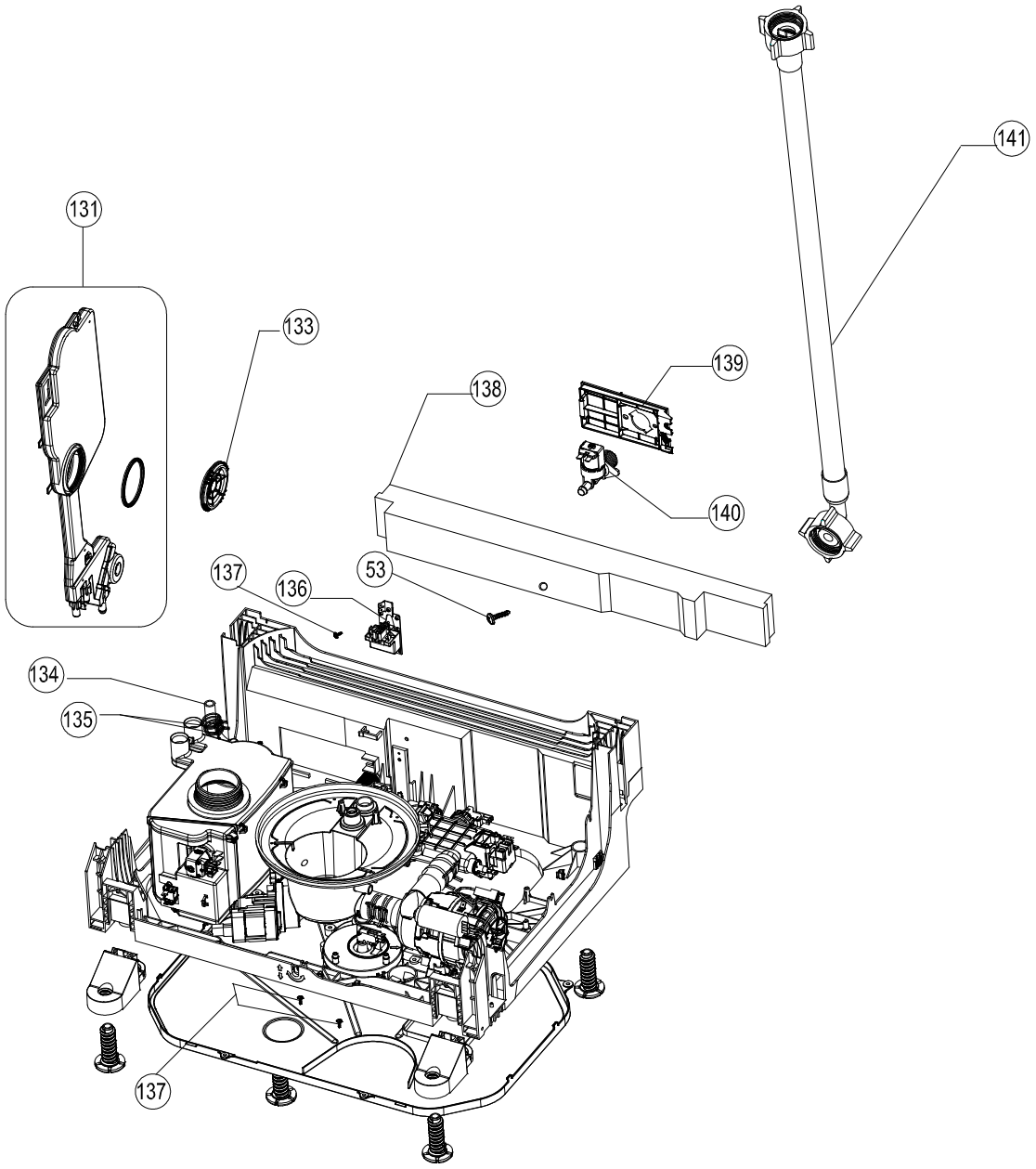

NO	PART NAME	QUANTITY
131	**AIR BREAK GROUP**	**1**
133	AIR BREAK NUT	*1*
134	HOSE D10*3*230 PVC/WITH CORD	*1*
135	CLAMP Dmax16,8x8,4	2
136	PARASITE FILTER	1
137	SCREW PT3X9 YSB	3
138	CONCRETE WEIGHT	1
139	BASEMENT HOSE.CON.PLS.	1
140	WATER INLET VALVE	1
141	WATER INLET HOSE GROUP	1
53	SCREW 4X42,5 YHB	1

DOOR GROUP

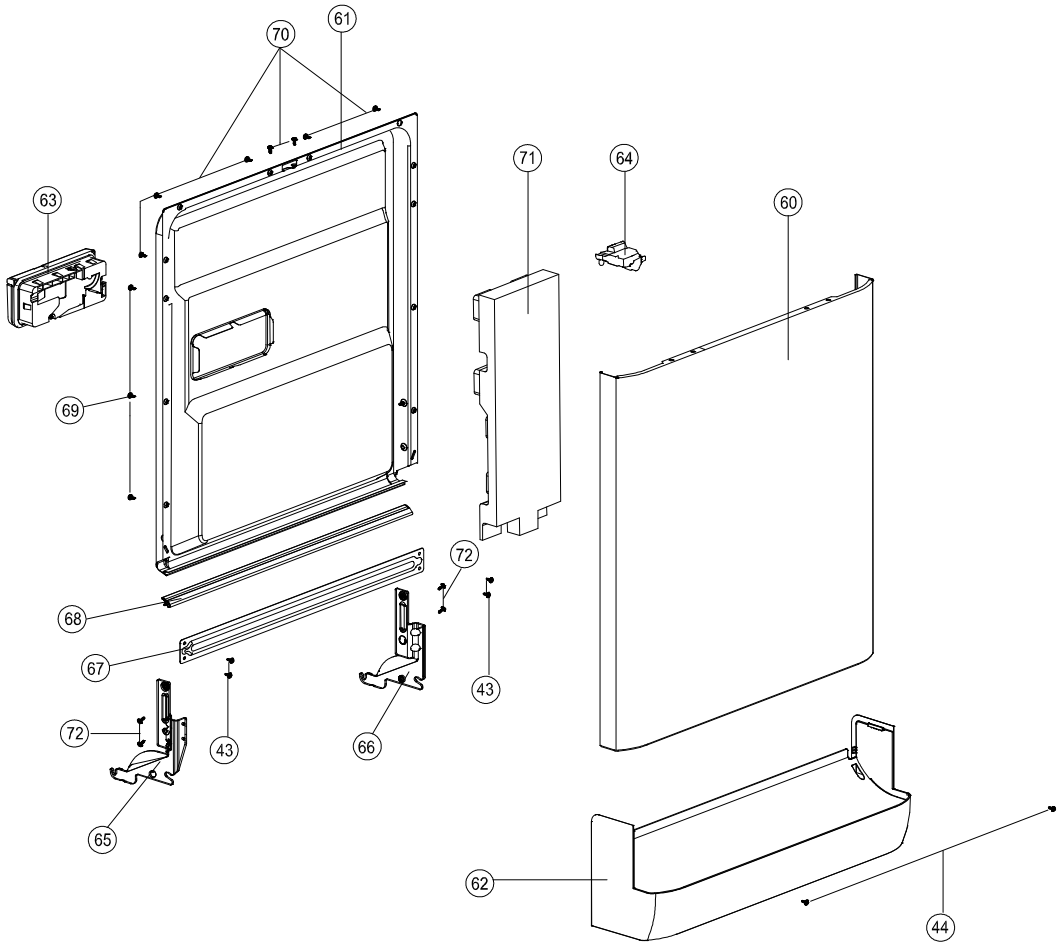

NO	PART NAME	QUANTITY
60	DOOR OUTSIDE	1
61	DOOR INSIDE SHEETIRON GROUP	1
62	PLASTIC KICK PLATE	1
63	DISPANSER WITHOUT REED RELAY	1
64	DOOR LOCK	1
65	HINGE MOVEMENT SHEETIRON LEFT	1
66	HINGE MOVEMENT SHEETIRON RIGHT	1
67	TWISTED SHEETIRON	1
68	DOOR SEAL	1
69	SCREW ST 3,9X12 FLAT HEAD INOX	6
70	SCREW PT4X14 FLAT HEAD INOX	8
71	DOOR SUPPORT STYROFOAM	1
72	SCREW M5X10 TORK HEAD (S)	4
43	SCREW M4X9 PAN HEAD (S)	4
44	SCREW PT 4X12 PAN HEAD COLLAR CROSS	2

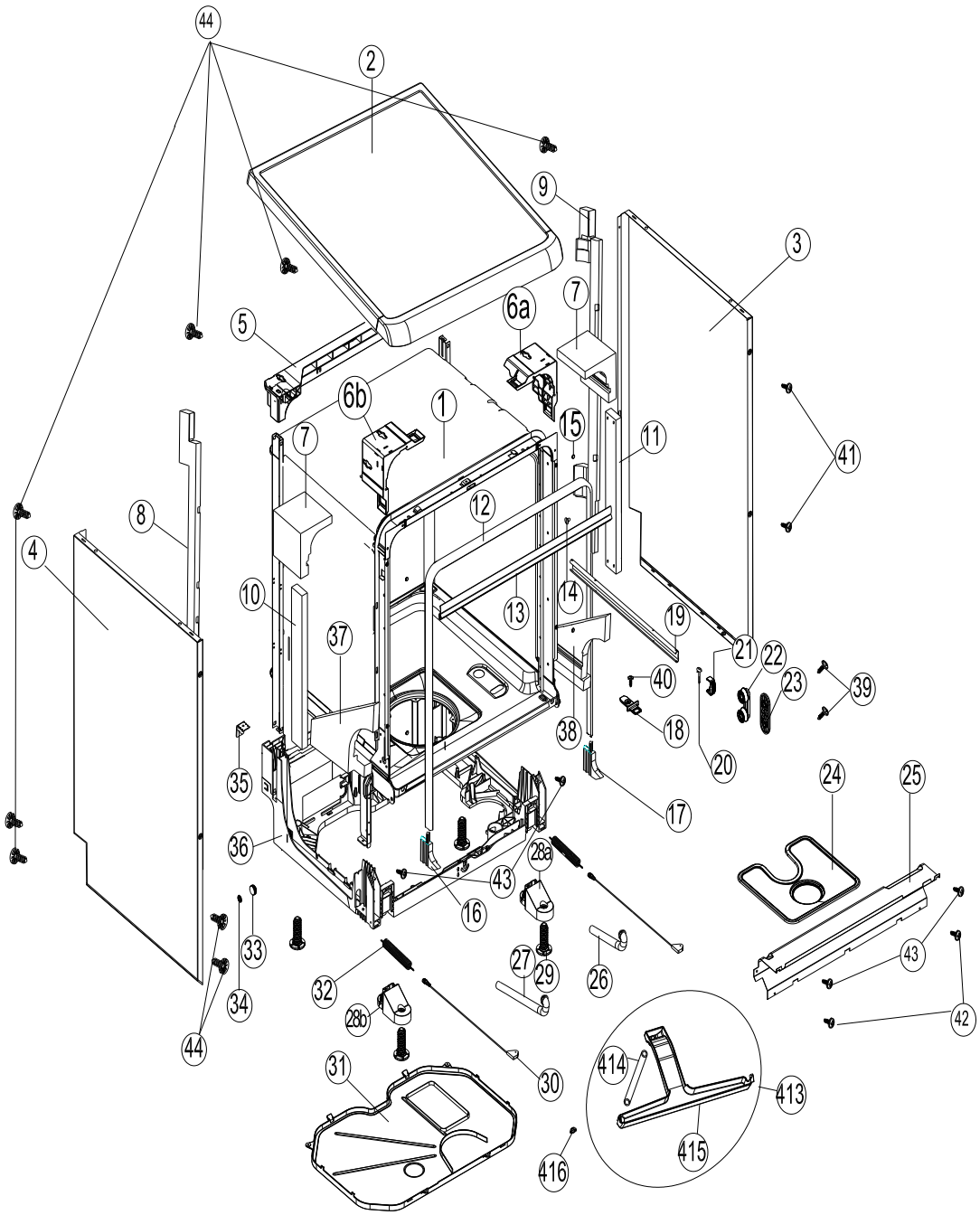

NO	PART NAME
1	TUBE ASSEMBLY
2	UPPER TRAY GROUP
3	FLAT/SIDE PANEL SHEETIRON-RIGHT
4	FLAT/SIDE PANEL SHEETIRON-LEFT

NOTE-1: The spare part with poz no 14 is not valid from 06.2011
NOTE-2: The spare part with poz no 16 and17 is not valid from 29.05.2012
NOTE-3: The spare part with poz no 15 is not valid from 09.07.2012

5	REAR UPPER PLS.CROSS BAR
6a	UPPER TRAY SUPPORT PART/RIGHT
6b	UPPER TRAY SUPPORT PART - **LEFT**
7	TUB TOP CORNER STYROFOAM
8	BACK CROSS BAR STYROFOAM-LEFT
9	BACK CROSS BAR STYROFOAM-RIGHT
10	FRONT CROSS BAR STYROFOAM-LEFT
11	FRONT CROSS BAR STYROFOAM-RIGHT
12	TUB GASKET
13	TOP TUB OF GASKET
14	TUB HOLE PLUG
15	SIDE PANEL FRONT CROSS BAR SCR CUPS/
16	BOTTOM CORNER GASKET-LEFT
17	BOTTOM CORNER GASKET-RIGHT
18	LATCH DOOR
19	UPPER BASKET RAIL
20	UPPER BASKET STOPPER-REAR
21	UPPER BASKET RAIL LOCK-FRONT
22	UPPER BASKET RAIL CON.BRA.GROUP
23	UPPER BASKET RAIL CON.BRA -REAR
24	METAL/PLASTIC FILTER
25	KICKPLATE SHEETIRON
26	OVERFLOW PIECE FROM TUB WITH HOSE/300mm
27	OVERFLOW PIECE FROM TUB WITH HOSE/450 mm
28a	FRONT FOOT CONN.PART-2 / RIGHT
28b	FRONT FOOT CONN.PART-2 / LEFT
29	ADJUSTED FOOT
30	HINGE CORD GROUP
31	LOWER COVER
32	HINGE SPRING
33	HINGE PULLEY
34	FIXED PULLEY SEG**/ THE SPARE PART WITH POZ NO 34 IS NOT VALID FROM 01.04.2013**
35	SPRING CONNECTION PART
36	BASEMENT
37	TUB LOWER CORNER STYROFOAM-LEFT
38	TUB LOWER CORNER STYROFOAM-RIGHT
39	SCREW PT5X20 WN 5451 TORX RONDELALI
40	SCREW M4X6 SB
41	SCREW 3,9X9,5 FLAT HEAD
42	SCREW PT3,5X9 PAN HEAD COLLAR CROSS)
43	SCREW M4*9 SB PAN HEAD (S)
44	SCREW PT4X12 PAN HEAD COLLAR CROSS
413	OVERFLOW PLS GR
414	OVERFLOW PLASTİC HOSE/PVC/UNSTRUNG
415	OVERFLOW PLASTIC
416	BOTTOM TUB OVERFLOW GASKET

NOTE-4: Pos numbers 26 and 27 which parts are removed from the production 11/07/2014. Instead 413,414,415 and 416 exposure the pieces are used.

COMPONENTS

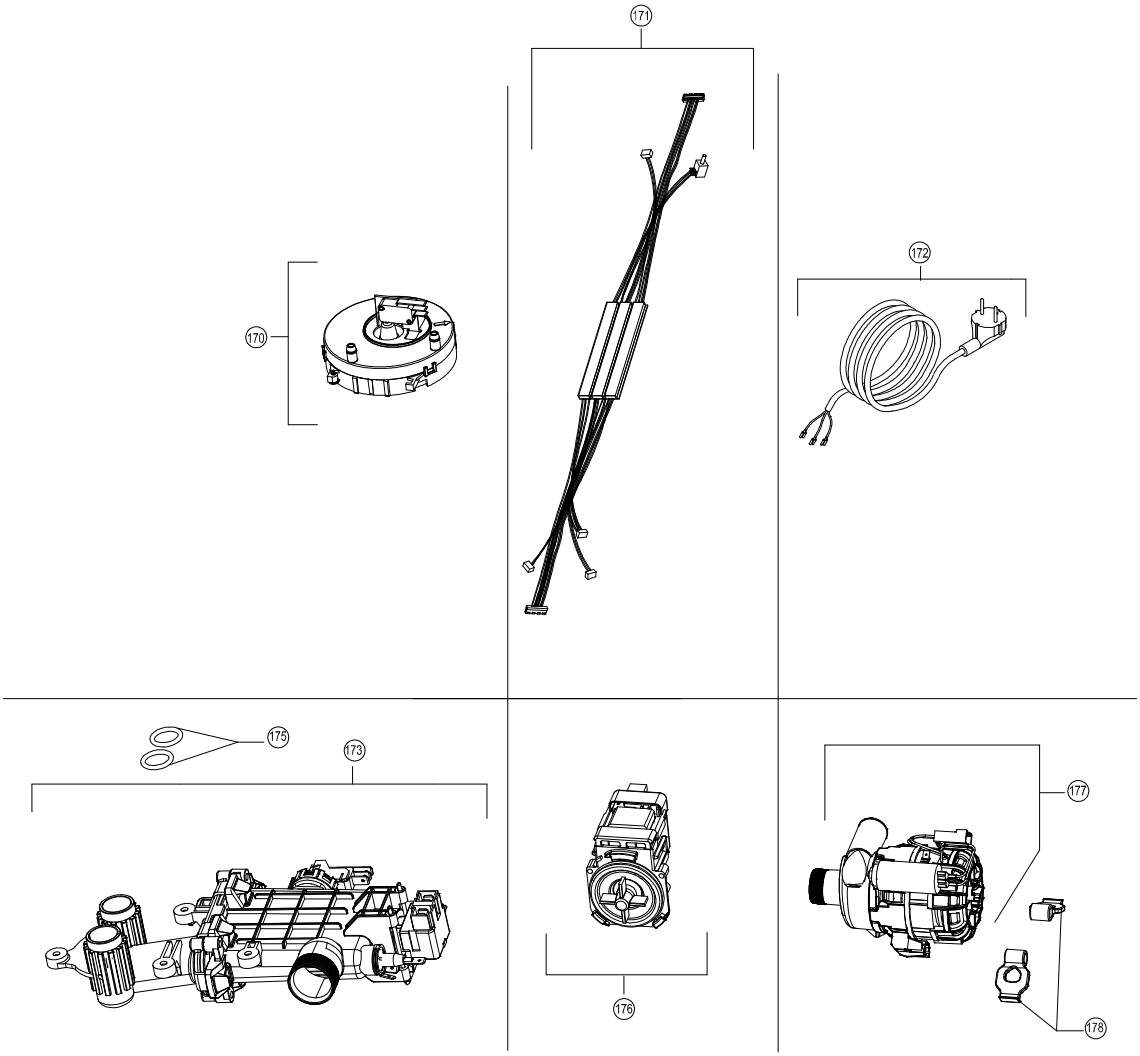

NO	PART NAME	QUANTITY
170	FLOATER	1
171	CABLE HARNESS	1
172	POWER CABLE 180cm/WHITE	1
173	HEATER CASING WITHOUT DIVERTER	1
175	HEATER CASING O-RİNG	2
176	DRAIN PUMP	1
177	WASHING PUMP	1
178	WASHING PUMP VINE SUPPORT	2