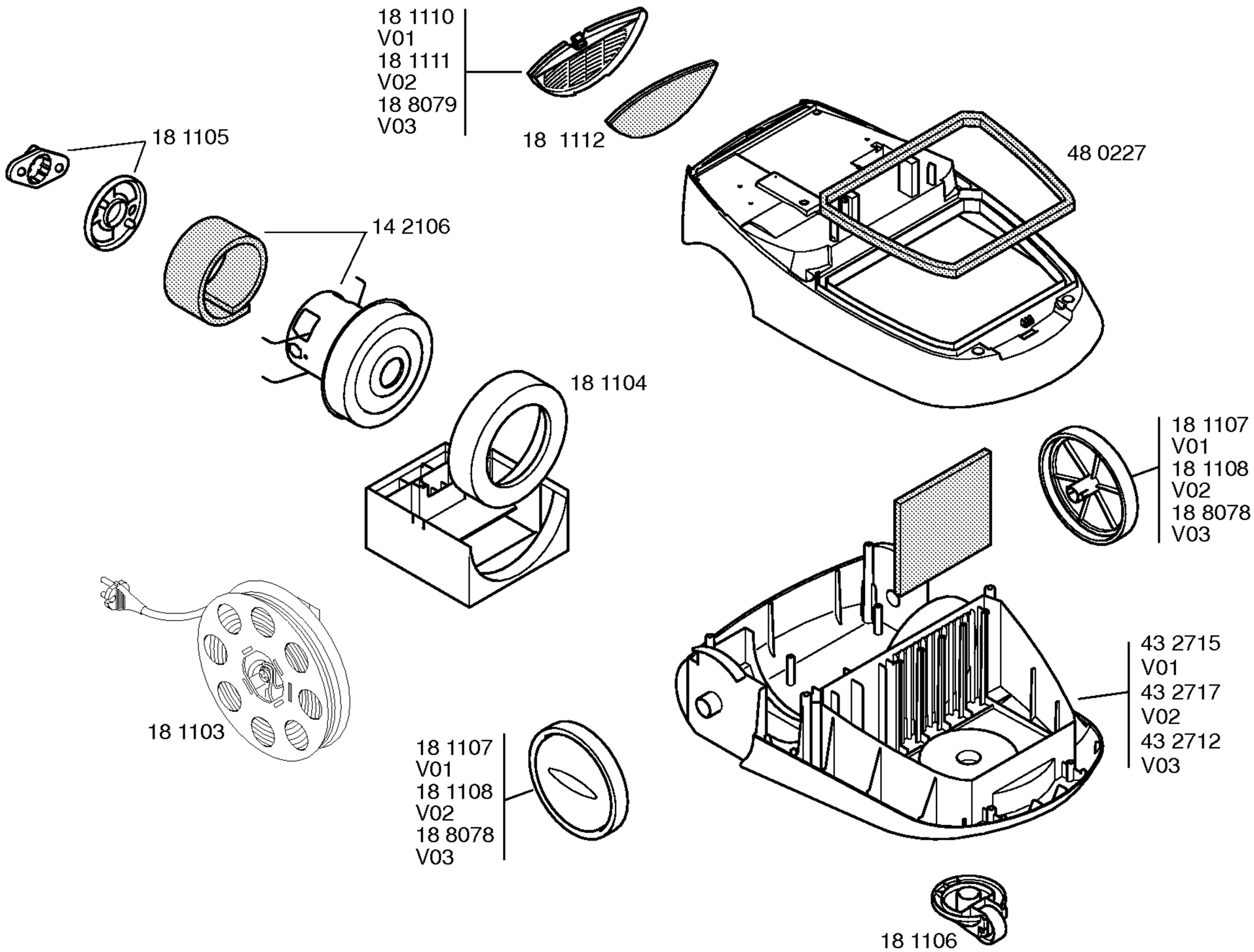

Copyright © (2010) by Ufesa / 205499

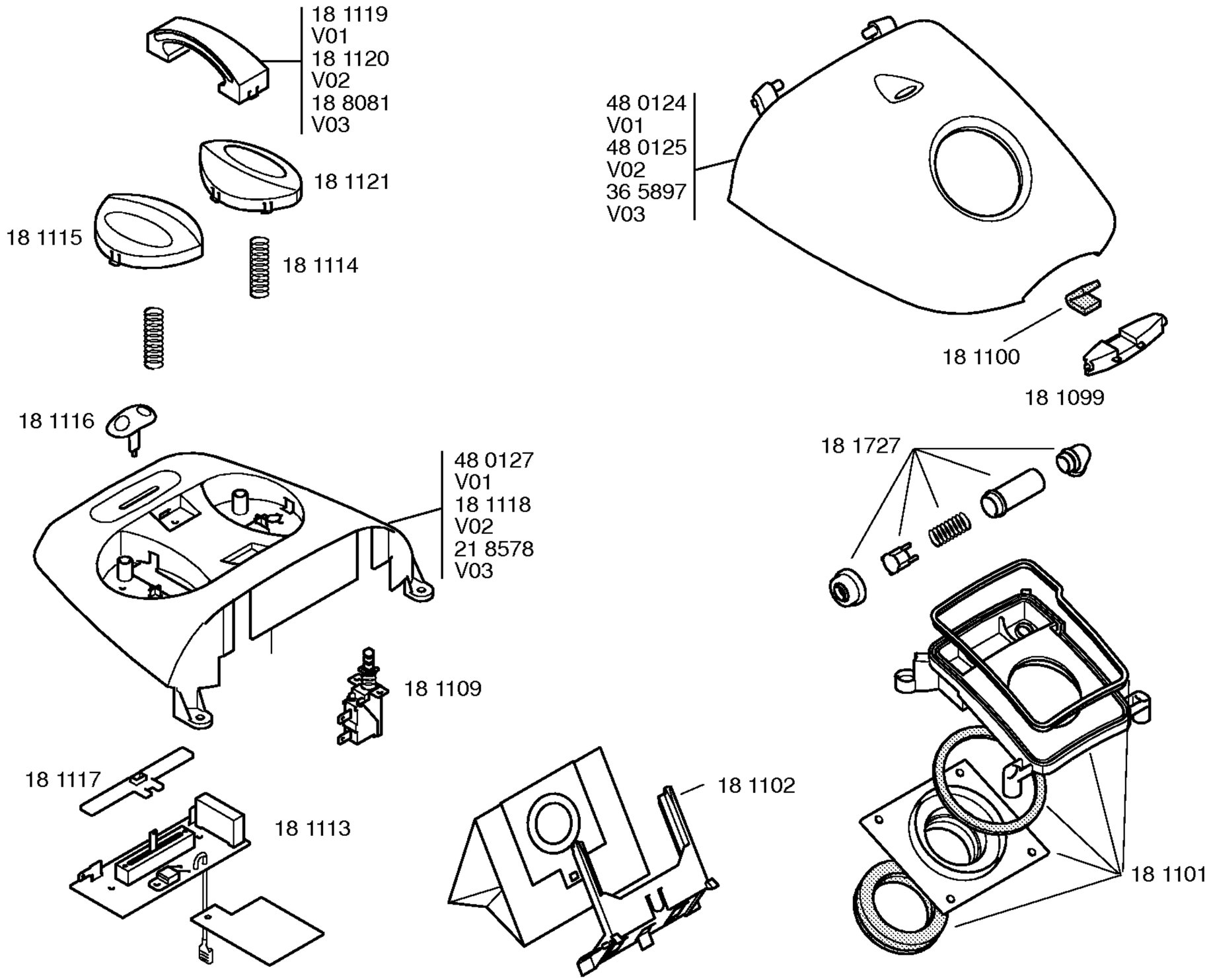

Copyright © (2010) by Ufesa / 205499

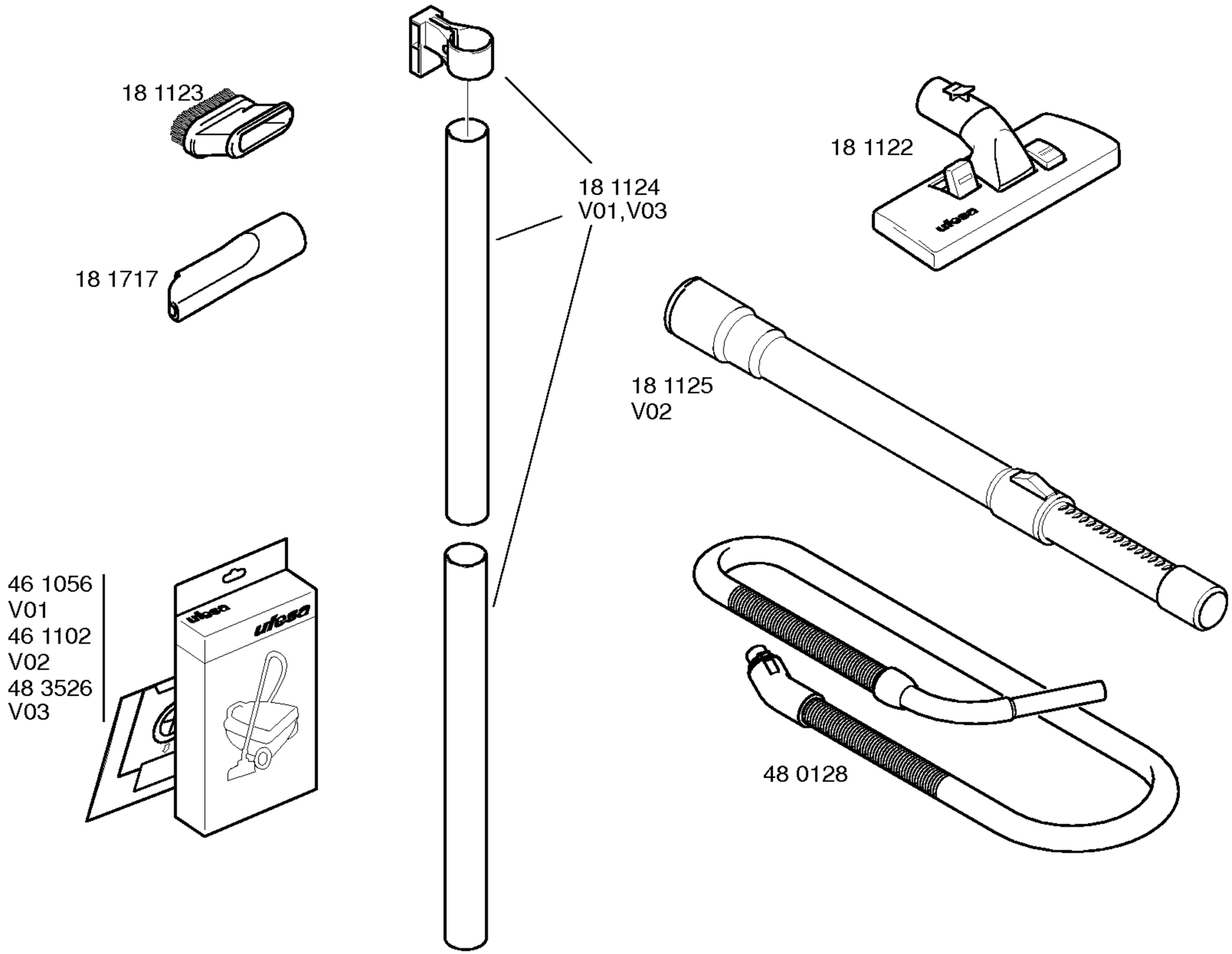

Copyright © (2010) by Ufesa / 205499