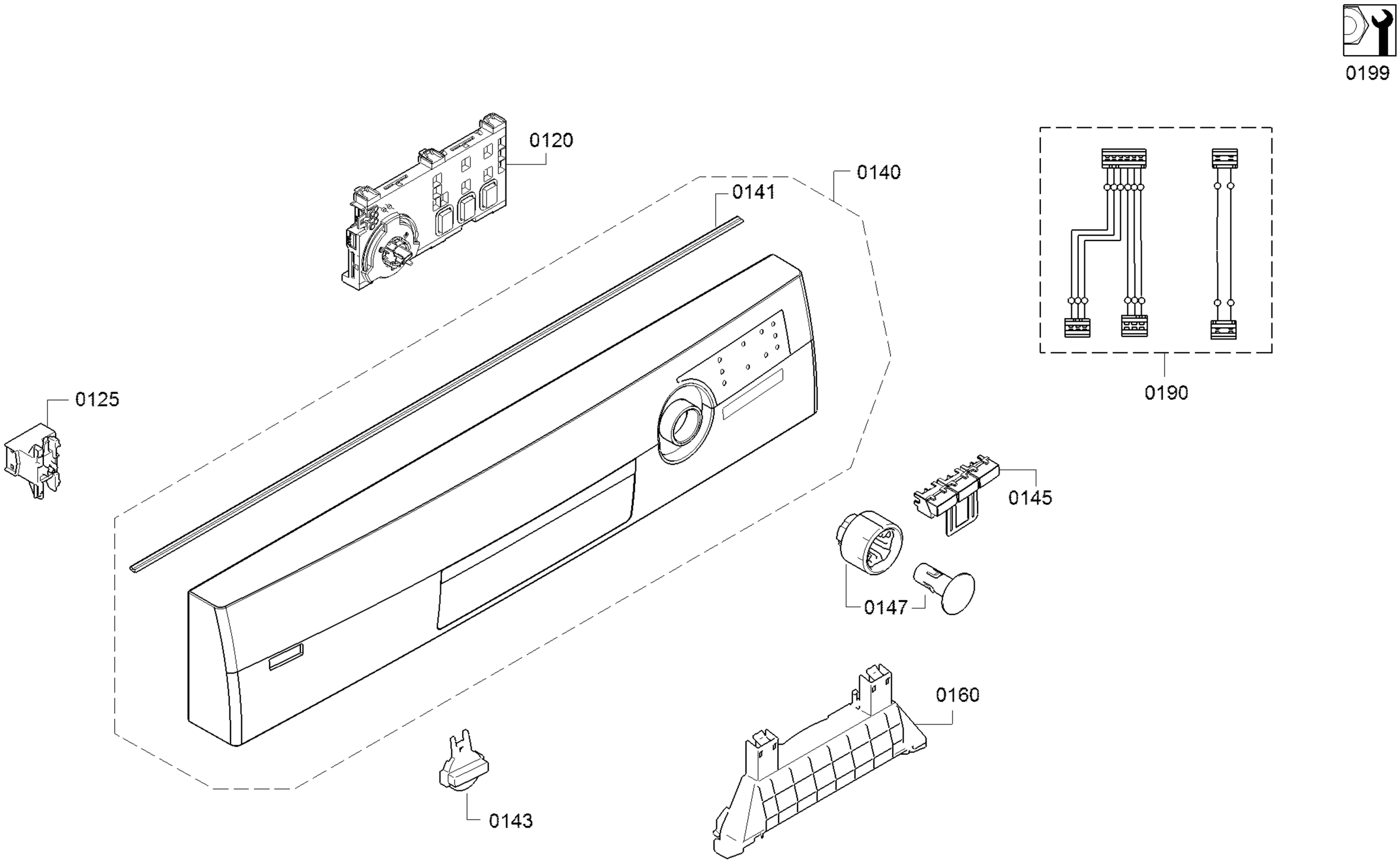

58300000210230 aet 001 a

Copyright © (2025) by Balay / 205499

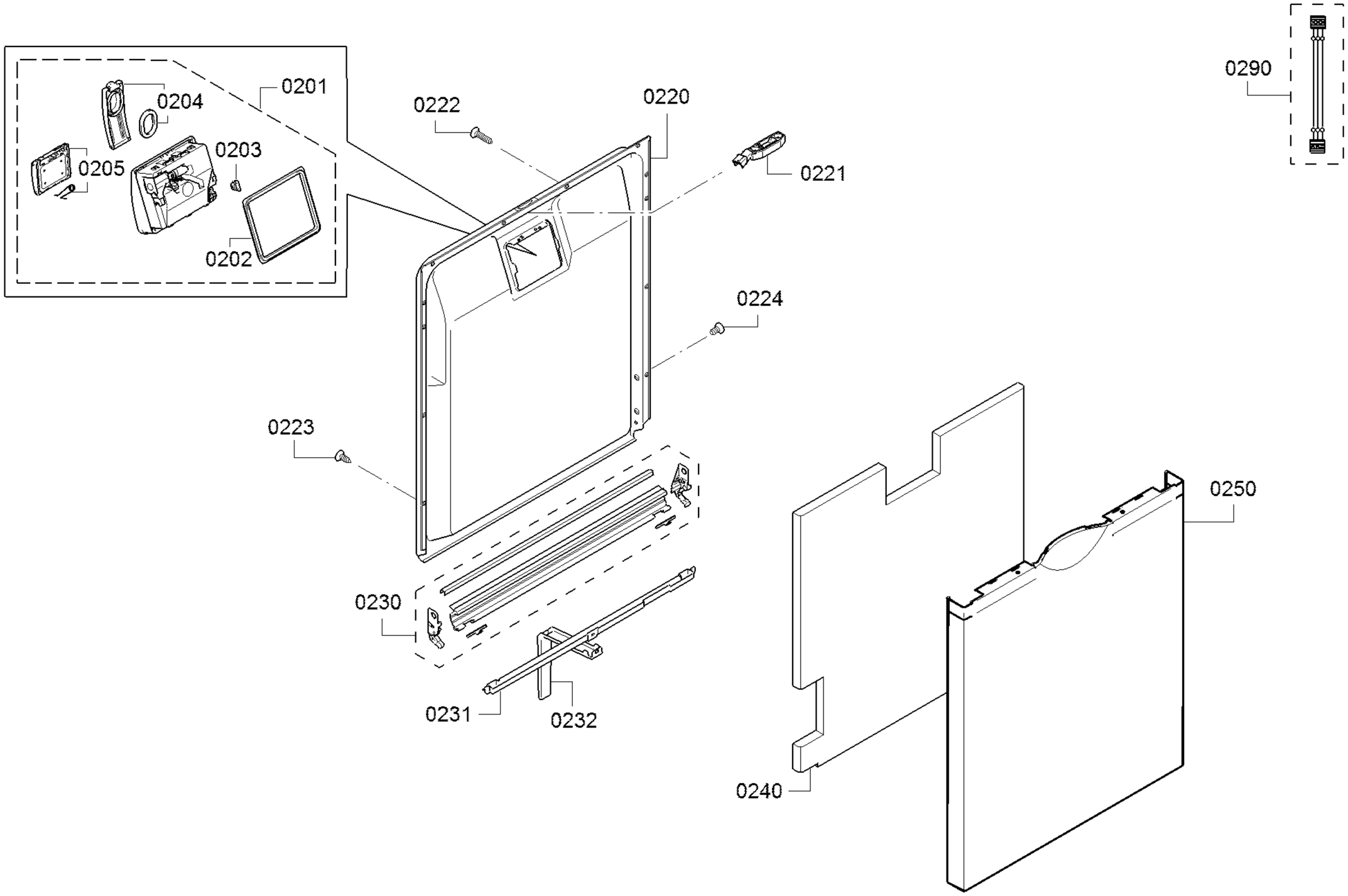

Copyright © (2025) by Balay / 205499

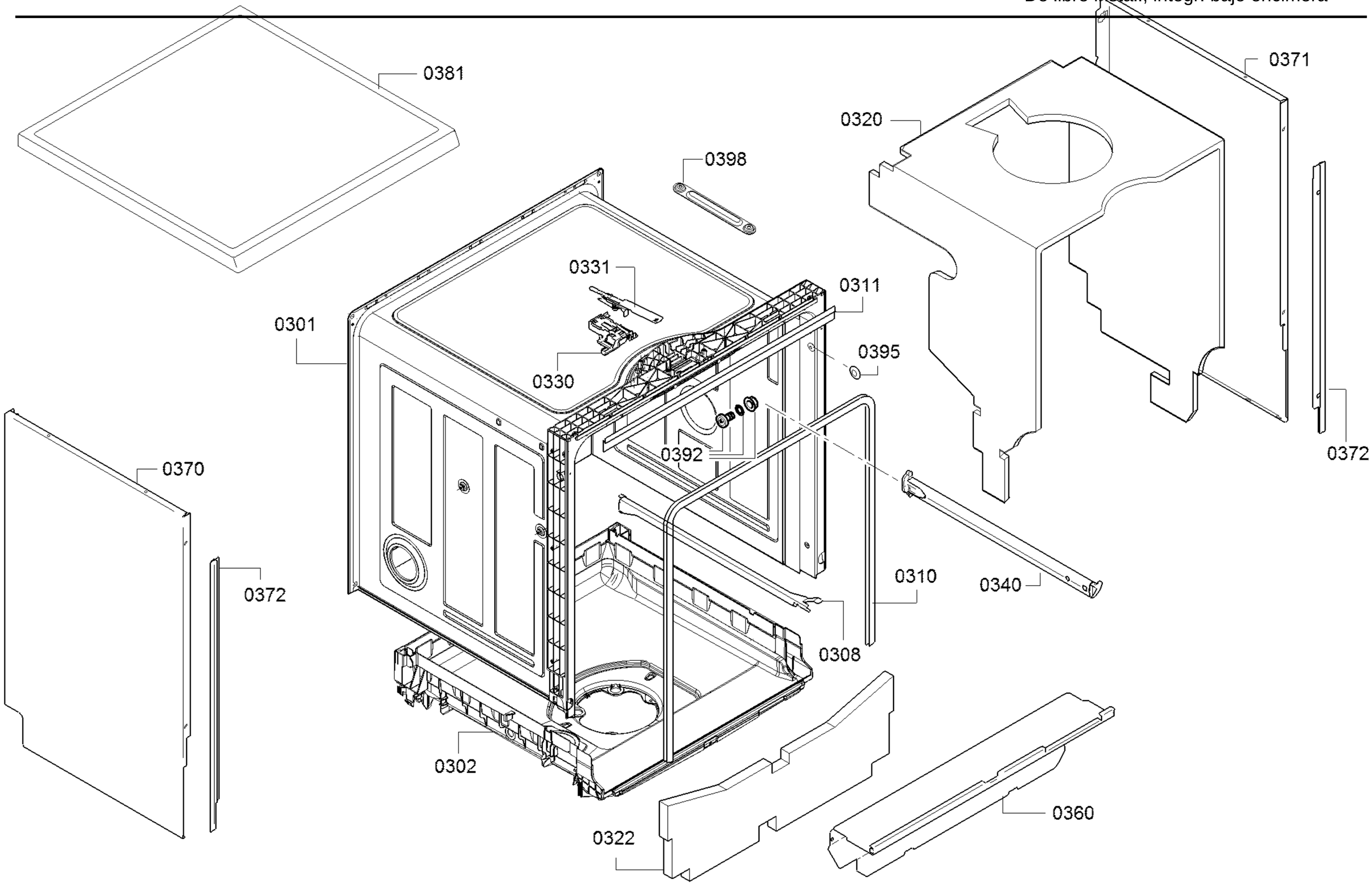

58300000211564 aet 003 d

Copyright © (2025) by Balay / 205499

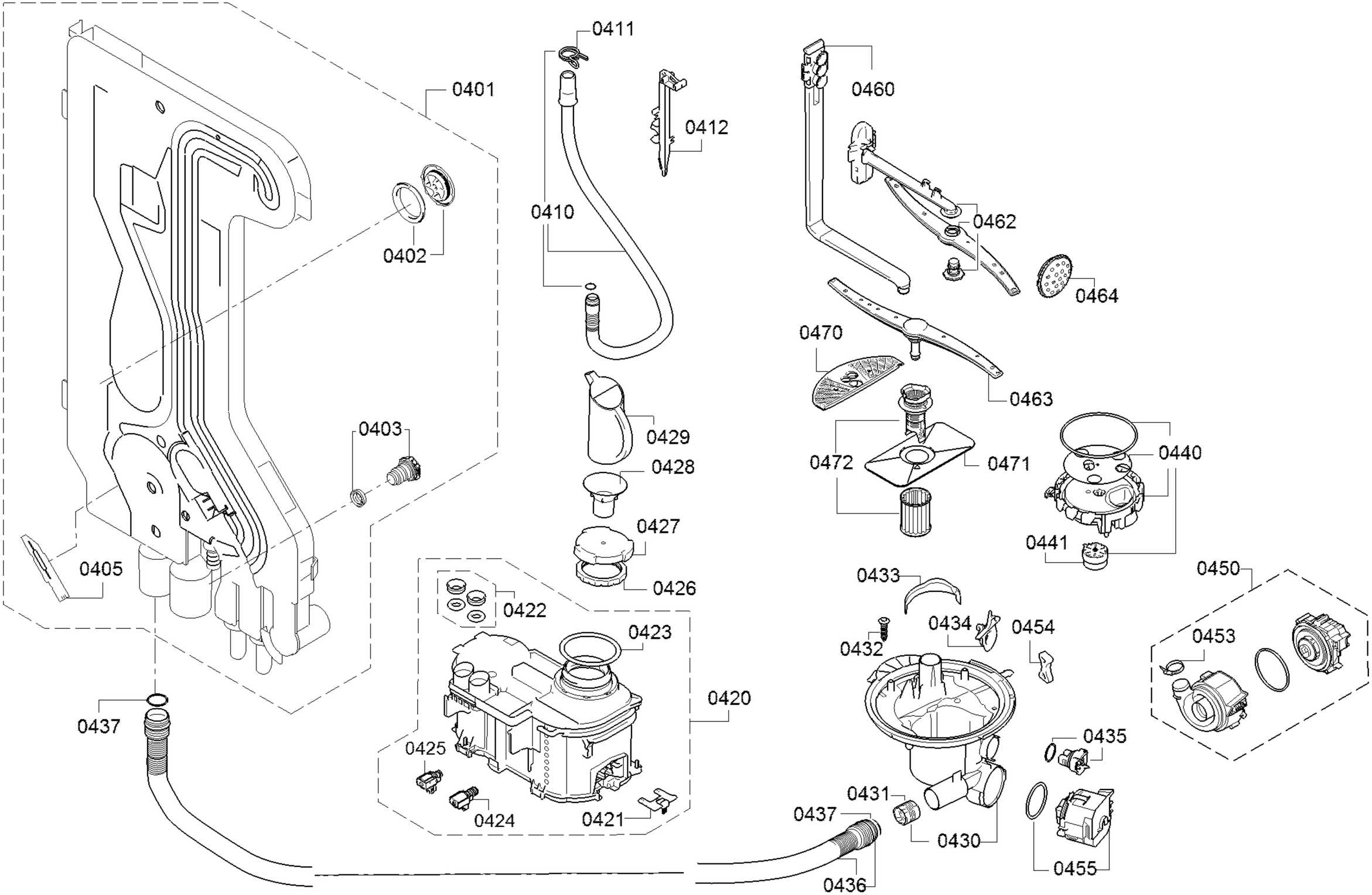

Copyright © (2025) by Balay / 205499

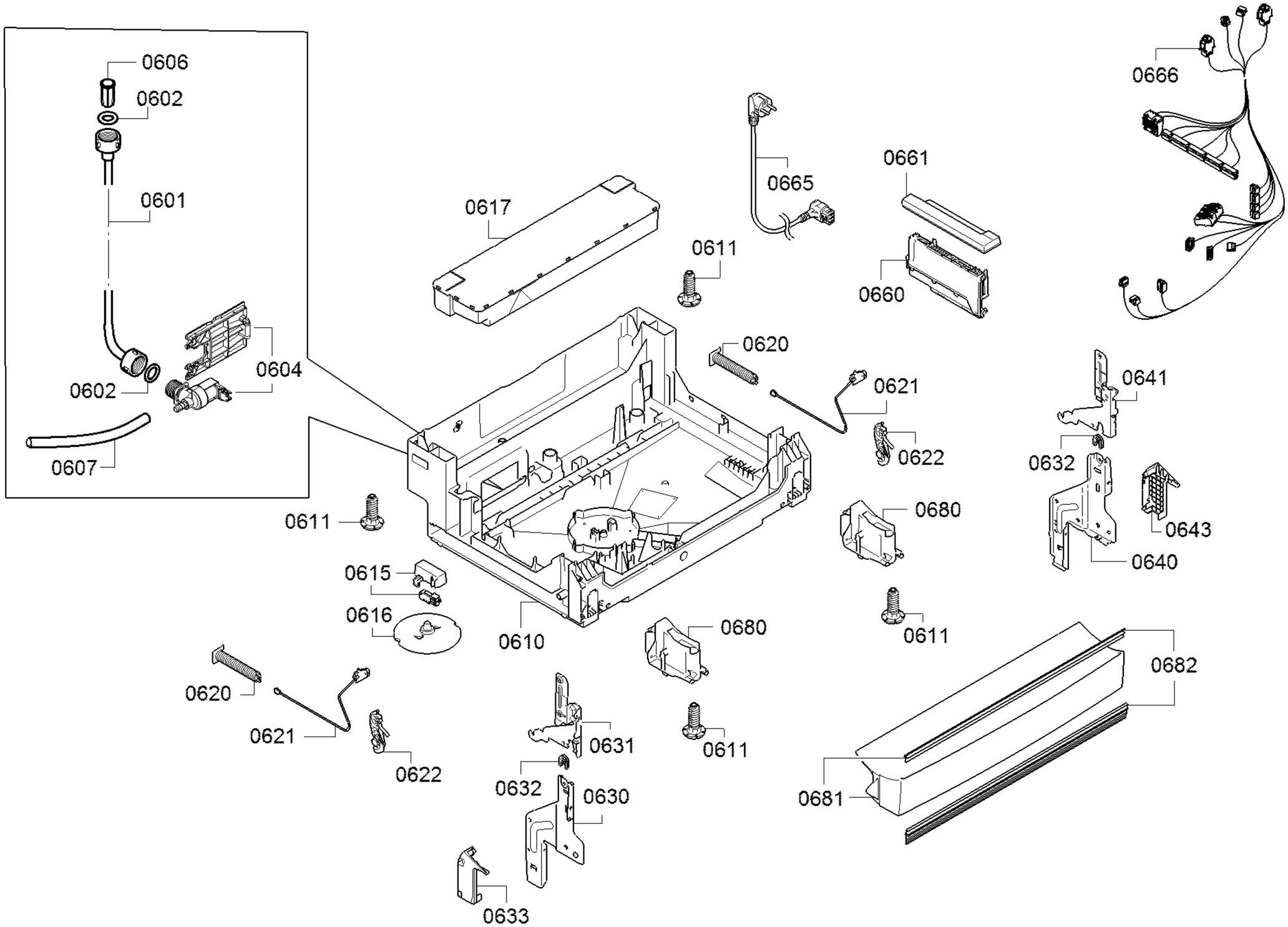

Copyright © (2025) by Balay / 205499

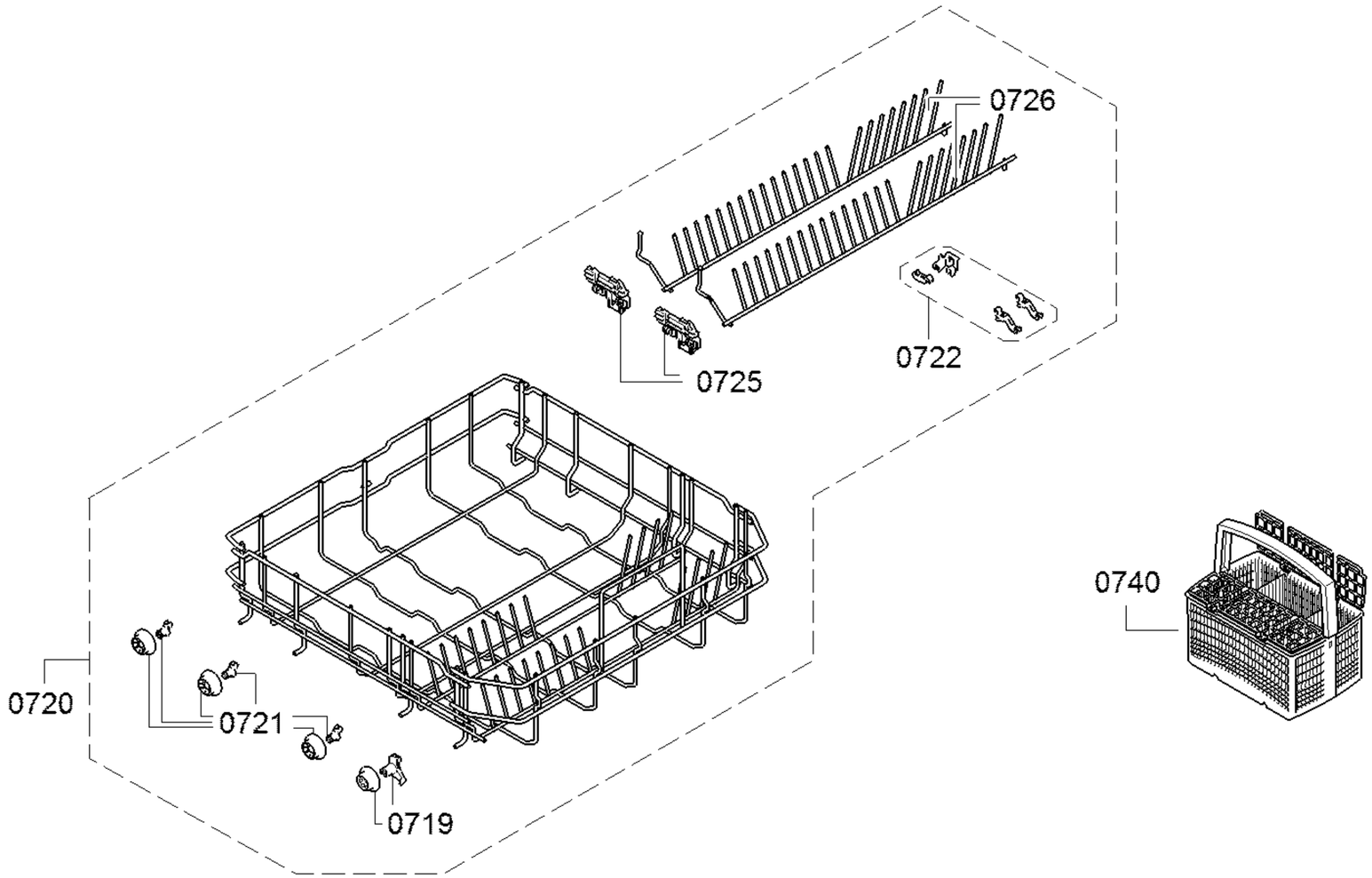

Copyright © (2025) by Balay / 205499

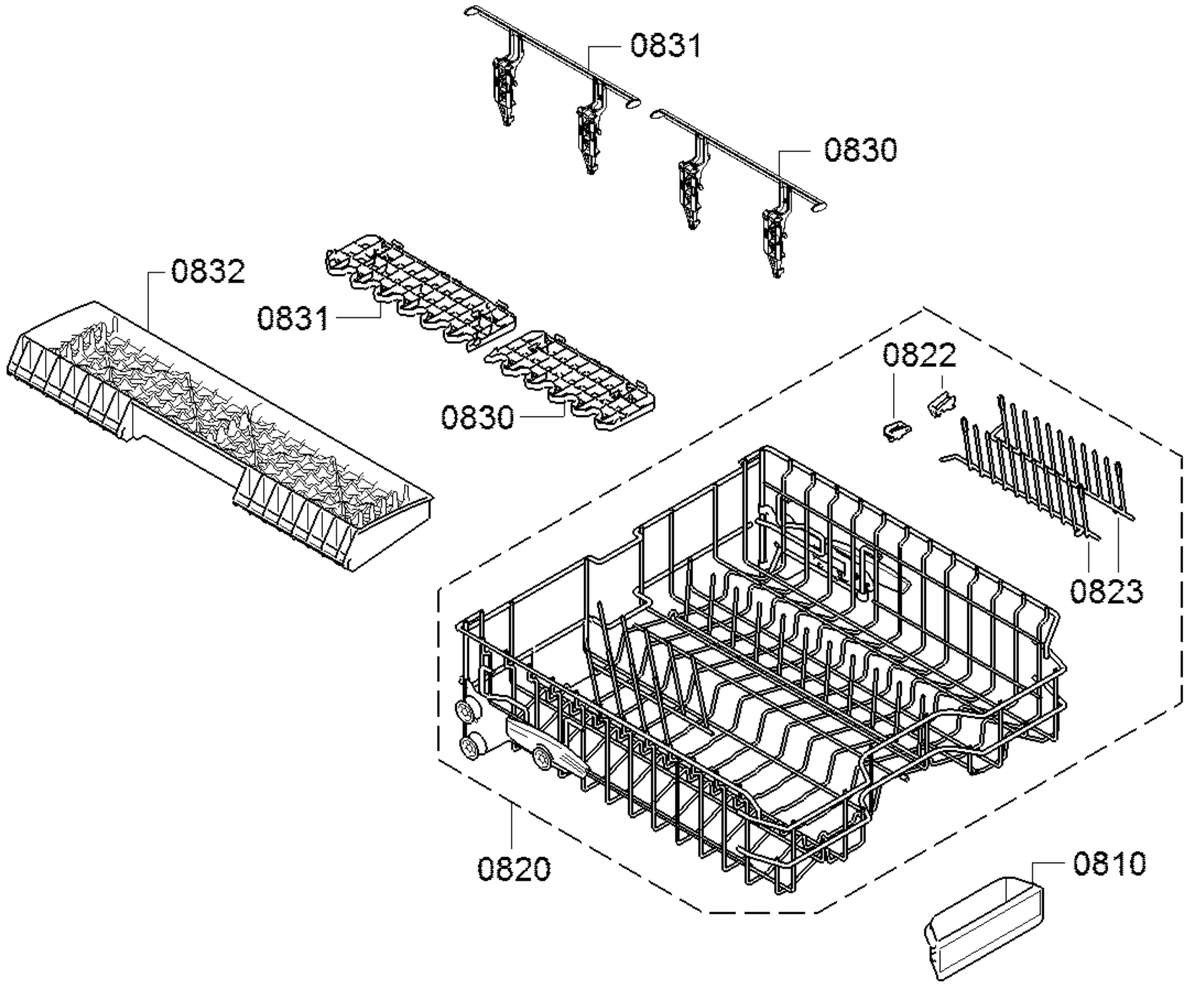

Copyright © (2025) by Balay / 205499